MODULE-1

1.1 A control system is an arrangement of physical components connected or related in such a manner as to command, direct, or regulate itself or another system, or is that means by which any quantity of interest in a system is maintained or altered in accordance with a desired manner.

Any control system consists of three essential components namely input, system and output. The input is the stimulus or excitation applied to a system from an external energy source. A system is the arrangement of physical components and output is the actual response obtained from the system. The control system may be one of the following type.

1) man made
2) natural and / or biological and
3) hybrid consisting of man made and natural or biological.

Examples:

1) An electric switch is man made control system, controlling flow of electricity.
   input : flipping the switch on/off
   system : electric switch
   output : flow or no flow of current
2) Pointing a finger at an object is a biological control system.
   input : direction of the object with respect to some direction
   system : consists of eyes, arm, hand, finger and brain of a man
   output : actual pointed direction with respect to same direction
3) Man driving an automobile is a hybrid system.
   input : direction or lane
   system : drivers hand, eyes, brain and vehicle
   output : heading of the automobile.

1.2 Classification of Control Systems

Control systems are classified into two general categories based upon the control action which is responsible to activate the system to produce the output viz.

1) Open loop control system in which the control action is independent of the out put.

2) Closed loop control system in which the control action is some how dependent upon the output and are generally called as feedback control systems.

Open Loop System is a system in which control action is independent of output. To each reference input there is a corresponding output which depends upon the system and its operating conditions. The accuracy of the system depends on the calibration of the system. In the presence of noise or disturbances open loop control will not perform satisfactorily.

VTUSYNC.IN

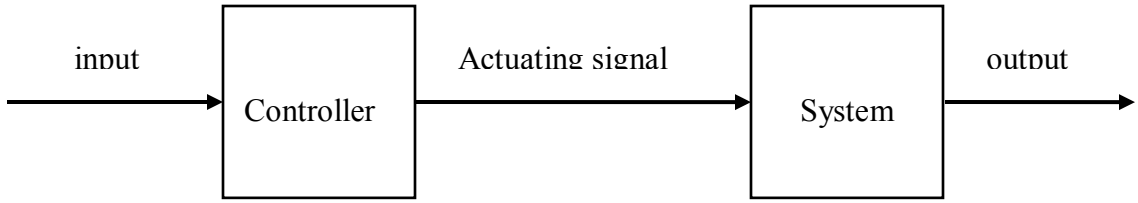

EXAMPLE - 1 Rotational Generator

The input to rotational generator is the speed of the prime mover (e.g steam turbine) in r.p.m. Assuming the generator is on no load the output may be induced voltage at the output terminals.

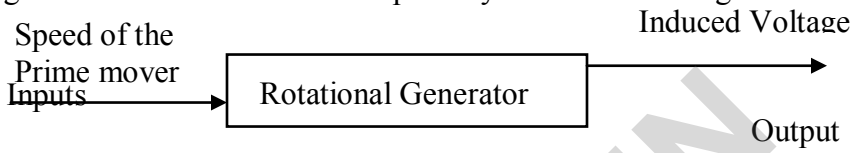

Fig 1-2 Rotational Generator

EXAMPLE – 2 Washing machine

Most (but not all) washing machines are operated in the following manner. After the clothes to be washed have been put into the machine, the soap or detergent, bleach and water are entered in proper amounts as specified by the manufacturer. The washing time is then set on a timer and the washer is energized. When the cycle is completed, the machine shuts itself off. In this example washing time forms input and cleanliness of the clothes is identified as output.

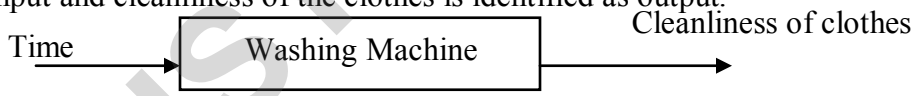

Fig 1-3 Washing Machine

EXAMPLE – 3 WATER TANK LEVEL CONTROL

To understand the concept further it is useful to consider an example let it be desired to maintain the actual water level 'c ' in the tank as close as possible to a desired level ' r '. The desired level will be called the system input, and the actual level the controlled variable or system output. Water flows from the tank via a valve V_o , and enters the tank from a supply via a control valve V_c. The control valve is adjustable manually.

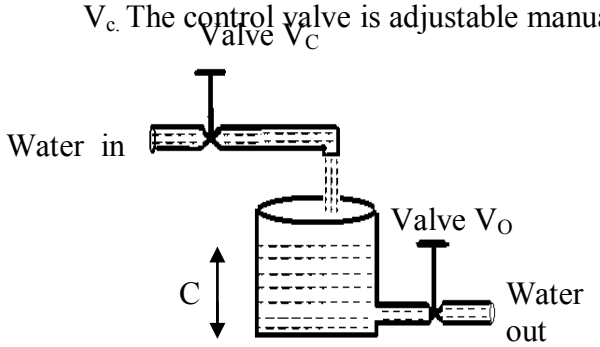

Fig –1.4 a) Water level control

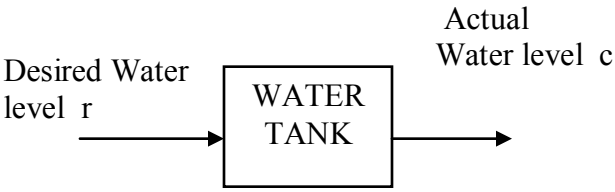

Fig 1-4 b) Open loop control

VTUSYNC.IN

A closed loop control system is one in which the control action depends on the output. In closed loop control system the actuating error signal, which is the difference between the input signal and the feed back signal (out put signal or its function) is fed to the controller.

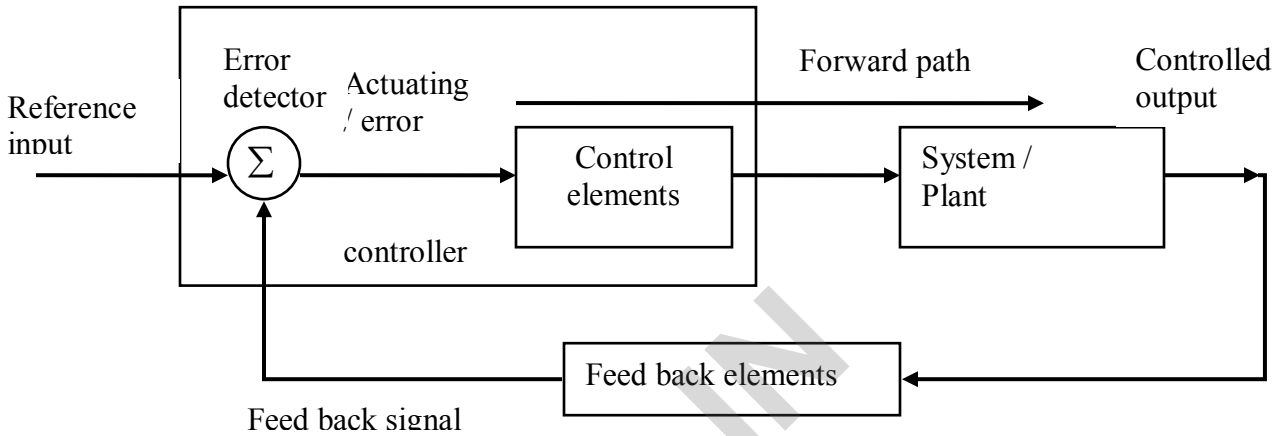

Fig –1.5: Closed loop control system

EXAMPLE – 1 – THERMAL SYSTEM

To illustrate the concept of closed loop control system, consider the thermal system shown in fig-6 Here human being acts as a controller. He wants to maintain the temperature of the hot water at a given value r^o C. the thermometer installed in the hot water outlet measures the actual temperature C^0 C. This temperature is the output of the system. If the operator watches the thermometer and finds that the temperature is higher than the desired value, then he reduce the amount of steam supply in order to lower the temperature. It is quite possible that that if the temperature becomes lower than the desired value it becomes necessary to increase the amount of steam supply. This control action is based on closed loop operation which involves human being, hand muscle, eyes, thermometer such a system may be called manual feed back system.

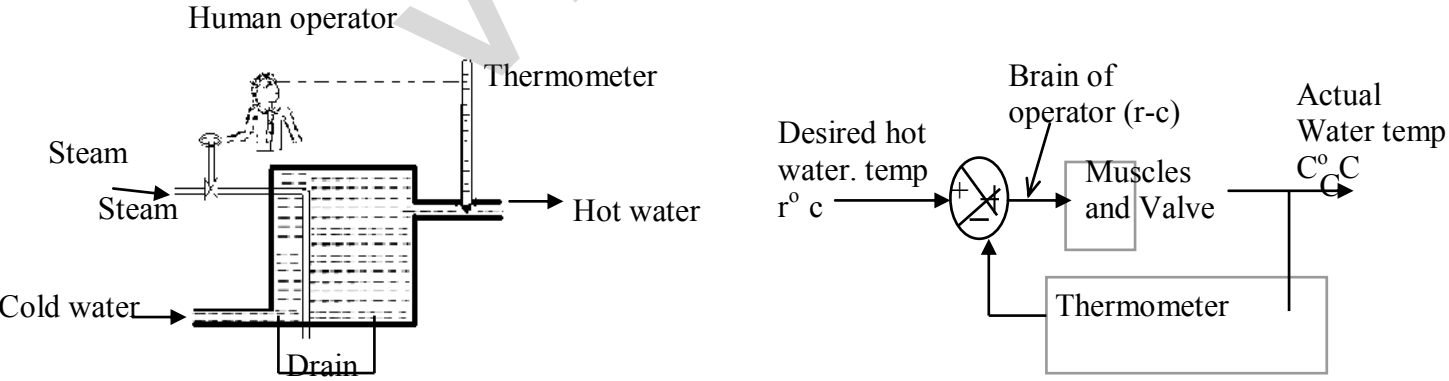

Fig 1-6 a) Manual feedback thermal system b) Block diagram

EXAMPLE –2 HOME HEATING SYSTEM

The thermostatic temperature control in hour homes and public buildings is a familiar example. An electronic thermostat or temperature sensor is placed in a central location usually on inside

VTUSYNC.IN

wall about 5 feet from the floor. A person selects and adjusts the desired room temperature (r) say 25^0 C and adjusts the temperature setting on the thermostat. A bimetallic coil in the thermostat is affected by the actual room temperature (c). If the room temperature is lower than the desired temperature the coil strip alters the shape and causes a mercury switch to operate a relay, which in turn activates the furnace fire when the temperature in the furnace air duct system reaches reference level ' r ' a blower fan is activated by another relay to force the warm air throughout the building. When the room temperature ' C ' reaches the desired temperature ' r ' the shape of the coil strip in the thermostat alters so that Mercury switch opens. This deactivates the relay and in turn turns off furnace fire, which in turn the blower.

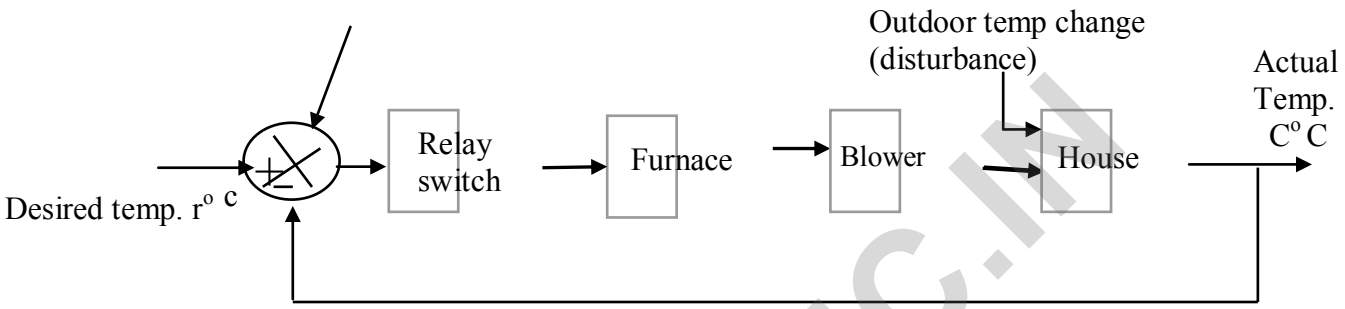

Fig 1-7 Block diagram of Home Heating system.

A change in out door temperature is a disturbance to the home heating system. If the out side temperature falls, the room temperature will likewise tend to decrease.

CLOSED- LOOP VERSUS OPEN LOOP CONTROL SYSTEMS

An advantage of the closed loop control system is the fact that the use of feedback makes the system response relatively insensitive to external disturbances and internal variations in systems parameters. It is thus possible to use relatively inaccurate and inexpensive components to obtain the accurate control of the given plant, whereas doing so is impossible in the open-loop case.

From the point of view of stability, the open loop control system is easier to build because system stability is not a major problem. On the other hand, stability is a major problem in the closed loop control system, which may tend to overcorrect errors that can cause oscillations of constant or changing amplitude.

It should be emphasized that for systems in which the inputs are known ahead of time and in which there are no disturbances it is advisable to use open-loop control. closed loop control systems have advantages only when unpredictable disturbances it is advisable to use open-loop control. Closed loop control systems have advantages only when unpredictable disturbances and / or unpredictable variations in system components used in a closed –loop control system is more than that for a corresponding open – loop control system. Thus the closed loop control system is generally higher in cost.

VTUSYNC.IN

1.3 Definitions:

Systems: A system is a combination of components that act together and perform a certain objective. The system may be physical, biological, economical, etc.

Control system: It is an arrangement of physical components connected or related in a manner to command, direct or regulate itself or another system.

Open loop: An open loop system control system is one in which the control action is independent of the output.

Closed loop: A closed loop control system is one in which the control action is somehow dependent on the output.

Plants: A plant is equipment the purpose of which is to perform a particular operation. Any physical object to be controlled is called a plant.

Processes: Processes is a natural or artificial or voluntary operation that consists of a series of controlled actions, directed towards a result.

Input: The input is the excitation applied to a control system from an external energy **source.** The inputs are also known as actuating signals.

Output: The output is the response obtained from a control system or known as controlled variable.

Block diagram: A block diagram is a short hand, pictorial representation of cause and effect relationship between the input and the output of a physical system. It characterizes the functional relationship amongst the components of a control system.

Control elements: These are also called controller which are the components required to generate the appropriate control signal applied to the plant.

Plant: Plant is the control system body process or machine of which a particular quantity or condition is to be controlled.

Feedback control: feedback control is an operation in which the difference between the output of the system and the reference input by comparing these using the difference as a means of control.

Feedback elements: These are the components required to establish the functional relationship between primary feedback signal and the controlled output.

Actuating signal: also called the error or control action. It is the algebraic sum consisting of reference input and primary feedback.

Manipulated variable: it that quantity or condition which the control elements apply to the controlled system.

Feedback signal: it is a signal which is function of controlled output

Disturbance: It is an undesired input signal which affects the output.

Forward path: It is a transmission path from the actuating signal to controlled output

Feedback path: The feed back path is the transmission path from the controlled output to the primary feedback signal.

Servomechanism: Servomechanism is a feedback control system in which output is some mechanical position, velocity or acceleration.

Regulator: Regulator is a feedback system in which the input is constant for long time.

Transducer: Transducer is a device which converts one energy form into other

Tachometer: Tachometer is a device whose output is directly proportional to time rate of change of input.

Synchros: Synchros is an AC machine used for transmission of angular position synchro motor-receiver, synchro generator- transmitter.

VTUSYNC.IN

Block diagram: A block diagram is a short hand, pictorial representation of cause and effect relationship between the input and the output of a physical system. It characterizes the functional relationship amongst the components of a control system.
Summing point: It represents an operation of addition and / or subtraction.
Negative feedback: Summing point is a subtractor.
Positive feedback: Summing point is an adder.
Stimulus: It is an externally introduced input signal affecting the controlled output.
Take off point: In order to employ the same signal or variable as an input to more than block or summing point, take off point is used. This permits the signal to proceed unaltered along several different paths to several destinations.
Time response: It is the output of a system as a function of time following the application of a prescribed input under specified operating conditions.

VTUSYNC.IN

1.4 DIFFERENTIAL EQUATIONS OF PHYSICAL SYSTEMS

The term mechanical translation is used to describe motion with a single degree of freedom or motion in a straight line. The basis for all translational motion analysis is Newton‘s second law of motion which states that the Net force F acting on a body is related to its mass M and acceleration ‘a‘ by the equation $\Sigma F = Ma$

‘Ma‘ is called reactive force and it acts in a direction opposite to that of acceleration. The summation of the forces must of course be algebraic and thus considerable care must be taken in writing the equation so that proper signs prefix the forces.

The three basic elements used in linear mechanical translational systems are (i) Masses (ii) springs iii) dashpot or viscous friction units. The graphical and symbolic notations for all three are shown in fig 1-8

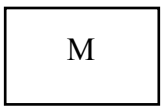

Fig 1-8 a) Mass

Fig 1-8 b) Spring

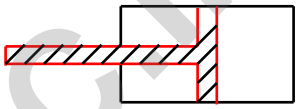

Fig 1-8 c) Dashpot

The spring provides a restoring a force when a force F is applied to deform a coiled spring a reaction force is produced, which to bring it back to its freelength. As long as deformation is small, the spring behaves as a linear element. The reaction force is equal to the product of the stiffness k and the amount of deformation.

Whenever there is motion or tendency of motion between two elements, frictional forces exist. The frictional forces encountered in physical systems are usually of nonlinear nature. The characteristics of the frictional forces between two contacting surfaces often depend on the composition of the surfaces. The pressure between surfaces, their relative velocity and others. The friction encountered in physical systems may be of many types

(coulomb friction, static friction, viscous friction) but in control problems viscous friction, predominates. Viscous friction represents a retarding force i.e. it acts in a direction opposite to the velocity and it is linear relationship between applied force and velocity. The mathematical expression of viscous friction F=BV where B is viscous frictional co-efficient. It should be realized that friction is not always undesirable in physical systems. Sometimes it may be necessary to introduce friction intentionally to improve dynamic response of the system. Friction may be introduced intentionally in a system by use of dashpot as shown in fig 1-9. In automobiles shock absorber is nothing but dashpot.

VTUSYNC.IN

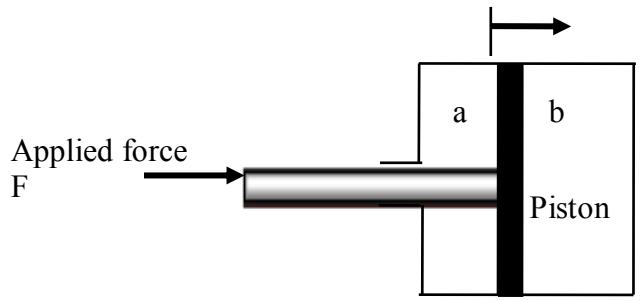

The basic operation of a dashpot, in which the housing is filled with oil. If a force f is applied to the shaft, the piston presses against oil increasing the pressure on side ‗b' and decreasing pressure side ‗a' As a result the oil flows from side ‗b' to side ‗a' through the wall clearance. The friction coefficient B depends on the dimensions and the type of oil used.

Outline of the procedure

For writing differential equations

1. Assume that the system originally is in equilibrium in this way the often-troublesome effect of gravity is eliminated.
2. Assume then that the system is given some arbitrary displacement if no distributing force is present.
3. Draw a freebody diagram of the forces exerted on each mass in the system. There should be a separate diagram for each mass.
4. Apply Newton's law of motion to each diagram using the convention that any force acting in the direction of the assumed displacement is positive is positive.
5. Rearrange the equation in suitable form to solve by any convenient mathematical means.

Lever

Lever is a device which consists of rigid bar which tends to rotate about a fixed point called ‗fulcrum' the two arms are called ―effort arm" and ―Load arm" respectively. The lever bears analogy with transformer

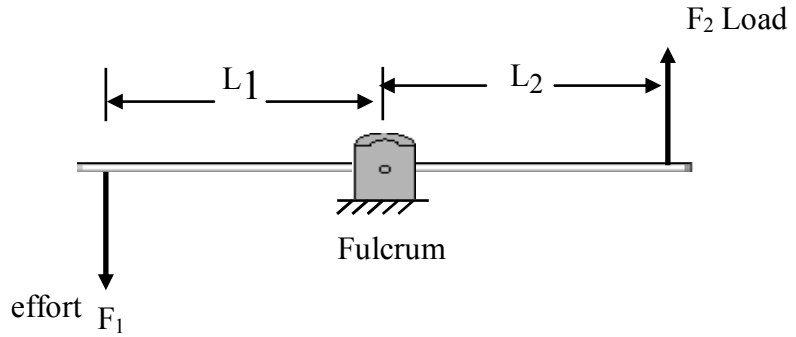

VTUSYNC.IN

It is also called _mechanical transformer‘

Equating the moments of the force

$F_1 L_1 = F_2 L_2$

$$F_2 = \frac{F_1 L_1}{L_2}$$

1.5 Rotational mechanical system

The rotational motion of a body may be defined as motion about a fixed axis. The variables generally used to describe the motion of rotation are torque, angular displacement θ, angular velocity (ω) and angular acceleration(α)

The three basic rotational mechanical components are 1) Moment of inertia J

2) Torsional spring 3) Viscous friction.

Moment of inertia J is considered as an indication of the property of an element, which stores the kinetic energy of rotational motion. The moment of inertia of a given element depends on geometric composition about the axis of rotation and its density. When a body is rotating a reactive torque is produced which is equal to the product of its moment of inertia (J) and angular acceleration and is given by $T = J\alpha = J \frac{d^2\theta}{dt^2}$

A well known example of a torsional spring is a shaft which gets twisted when a torque is applied to it. $T_s = K\theta$, θ is angle of twist and K is torsional stiffness.

There is viscous friction whenever a body rotates in viscous contact with another body. This torque acts in opposite direction so that angular velocity is ω given by

$T = f\ \omega = f \frac{d^2\theta}{dt^2}$ Where ω = relative angular velocity between two bodies.

f = co efficient of viscous friction.

Newton‘s II law of motion states

$$\Sigma T = J \frac{d2\theta}{dt^2}.$$

Gear wheel

VTUSYNC.IN

In almost every control system which involves rotational motion gears are necessary. It is often necessary to match the motor to the load it is driving. A motor which usually runs at high speed and low torque output may be required to drive a load at low speed and high torque.

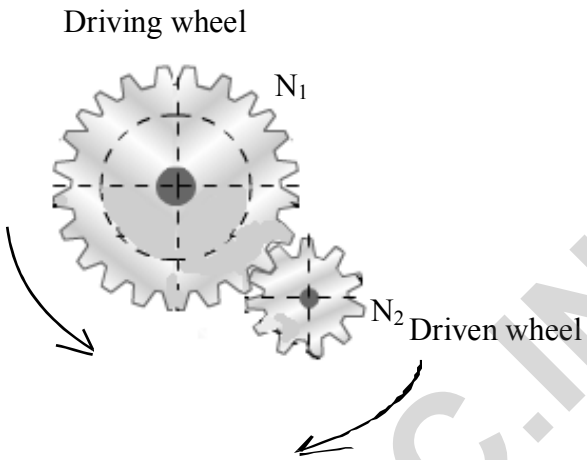

1.6 Analogous Systems

Consider the mechanical system shown in fig A and the electrical system shown in fig B

The differential equation for mechanical system is

$$M + \frac{d^2x}{dt^2} + B\frac{dx}{dt} + KX = f(t) \quad \text{---------- 1}$$

The differential equation for electrical system is

$$L + \frac{d^2q}{dt^2} \quad R \quad \frac{d^2q}{dt^2} \quad \frac{q}{c} \quad \text{---------- 2}$$

Comparing equations (1) and (2) we see that for the two systems the differential equations are of identical form such systems are called ―analogous systems and the terms which occupy the corresponding positions in differential equations are analogous quantities"

The analogy is here is called force voltage analogy

Table for conversion for force voltage analogy

Mechanical System		**Electrical System**
Force (torque)	⟶	Voltage
Mass (Moment of inertia)	⟶	Inductance

VTUSYNC.IN

Viscous friction coefficient → Resistance

Spring constant → Capacitance

Displacement → Charge

Velocity → Current.

Force – Current Analogy

Another useful analogy between electrical systems and mechanical systems is based on force – current analogy. Consider electrical and mechanical systems shown in fig.

For mechanical system the differential equation is given by

$$M + \frac{d^2x}{dt^2} \quad B \quad \frac{dx}{dt} \quad X = f(t) \text{ ---------- } 1$$

For electrical system

$$C \frac{d^2x}{dt^2} + \frac{1}{R} + \frac{d\Phi}{dt^2} + \frac{\Phi}{L} = I(t)$$

Comparing equations (1) and (2) we find that the two systems are analogous systems. The analogy here is called force – current analogy. The analogous quantities are listed.

Table of conversion for force – current analogy

Mechanical System		Electrical System
Force(torque)	→	Current
Mass(Moment of inertia)	→	Capacitance
Viscous friction coefficient	→	Conductance
Spring constant	→	Inductance
Displacement (angular)	→	Flux
Velocity (angular)	→	Voltage

VTUSYNC.IN

Illustration 1: For a two DOF spring mass damper system obtain the mathematical model where F is the input x_1 and x_2 are responses.

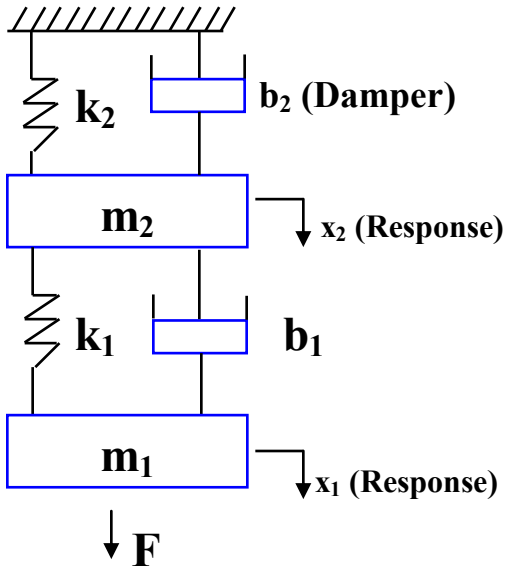

Figure 1.10 (a)

Draw the free body diagram for mass m_1 and m_2 separately as shown in figure 1.10 (b)

Apply NSL for both the masses separately and get equations as given in (a) and (b)

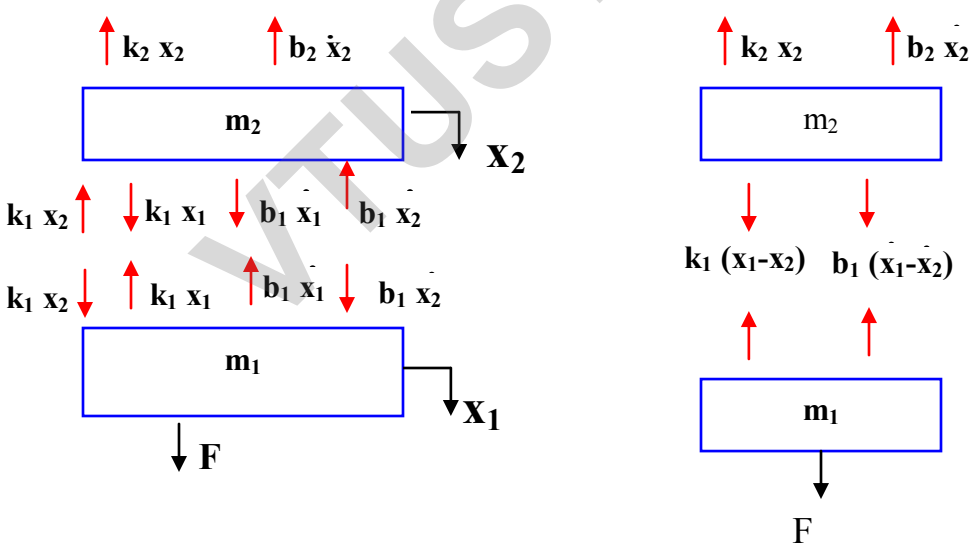

Figure 1.10 (b)

From NSL $\sum F = ma$

For mass m_1

VTUSYNC.IN

$$m_1 x_1 = F - b_1 (x_1 - x_2) - k_1 (x_1 - x_2) \qquad \text{--- (a)}$$

For mass m_2

$$m_2 \ddot{x}_2 = b_1 (\dot{x}_2 - \dot{x}_1) + k_1 (x_2 - x_1) - b_2 \dot{x}_2 - k_2 x_2 \qquad \text{--- (b)}$$

Illustration 2: For the system shown in figure 2.16 (a) obtain the mathematical model if x_1 and x_2 are initial displacements.

Let an initial displacement x_1 be given to mass m_1 and x_2 to mass m_2.

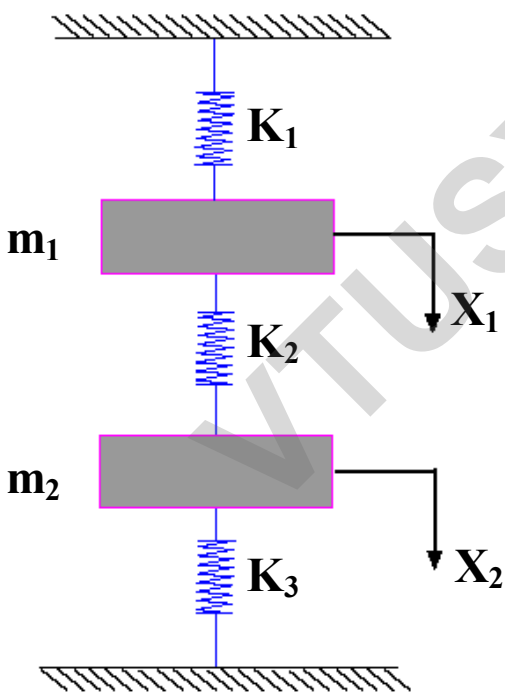

Figure 1.11 (a)

VTUSYNC.IN

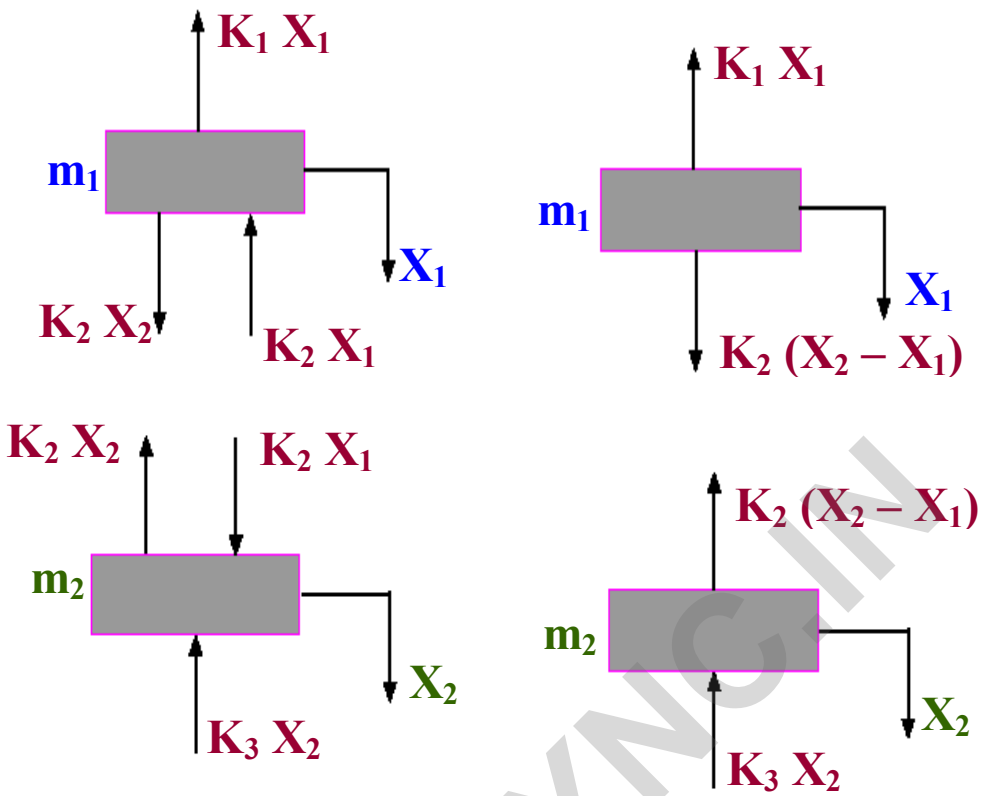

Figure 2.16 (b)

Based on Newton's second law of motion: $\sum F = ma$

For mass m_1

$m_1\ddot{x}_1 = - K_1x_1 + K_2 (x_2-x_1)$

$m_1\ddot{x}_1 + K_1x_1 – K_2 x_2 + K_2x_1 = 0$

$m_1\ddot{x}_1 + x_1 (K_1 + K_2) = K_2x_2$ ----- (1)

For mass m_2

$m_2\ddot{x}_2 = - K_3x_2 – K_2 (x_2 – x_1)$

$m_2\ddot{x}_2 + K_3 x_2 + K_2 x_2 – K_2 x_1$

$m_2 \ddot{x}_2 + x_2 (K_2 + K_3) = K_2x_1$ ----- (2)

VTUSYNC.IN

Mathematical models are:

$m_1\ddot{x}_1 + x_1 (K_1 + K_2) = K_2x_2$ ----- (1)

$m_2\ddot{x}_2 + x_2 (K_2 + K_3) = K_2x_1$ ----- (2)

1.Write the differential equation relating to motion X of the mass M to the force input u(t)

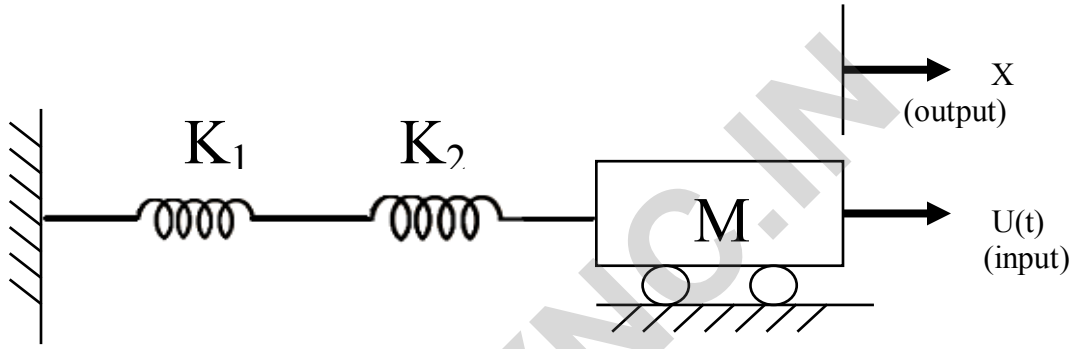

2. Write the force equation for the mechanical system shown in figure

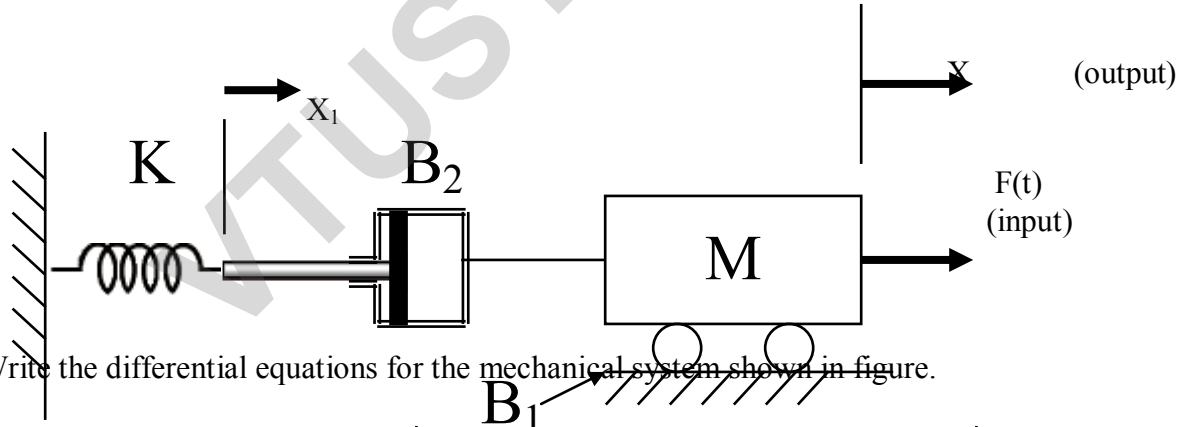

3. Write the differential equations for the mechanical system shown in figure.

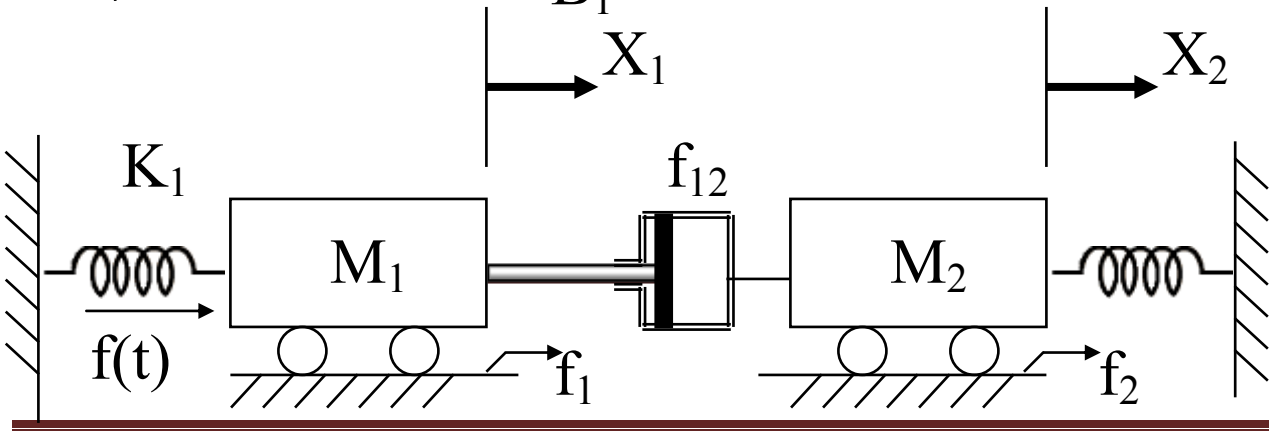

VTUSYNO.IN

4. Write the modeling equations for the mechanical systems shown in figure.

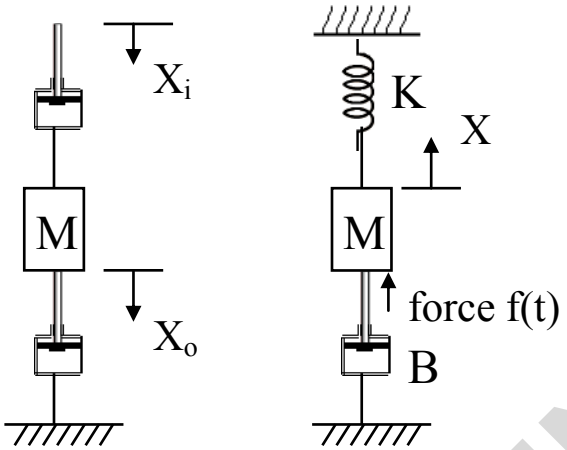

5. For the systems shown in figure write the differential equations and obtain the transfer functions indicated.

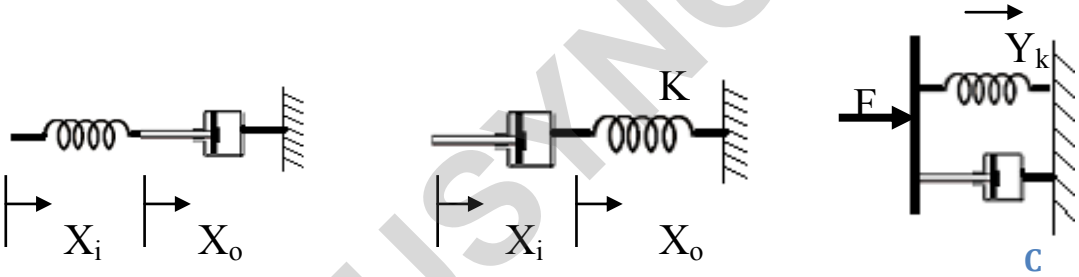

6. Write the differential equation describing the system. Assume the bar through which force is applied is not flexible, has no mass or moment of inertia, and all displacements are small.

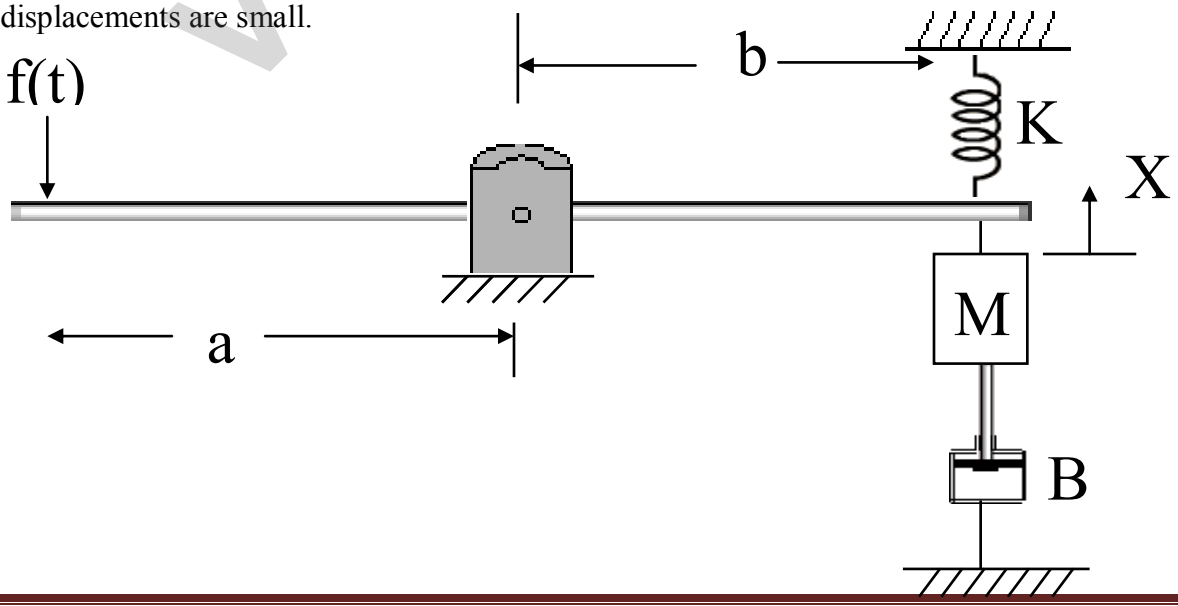

VTUSYNC.IN

7. Write the equations of motion in terms of given mechanical quantities.

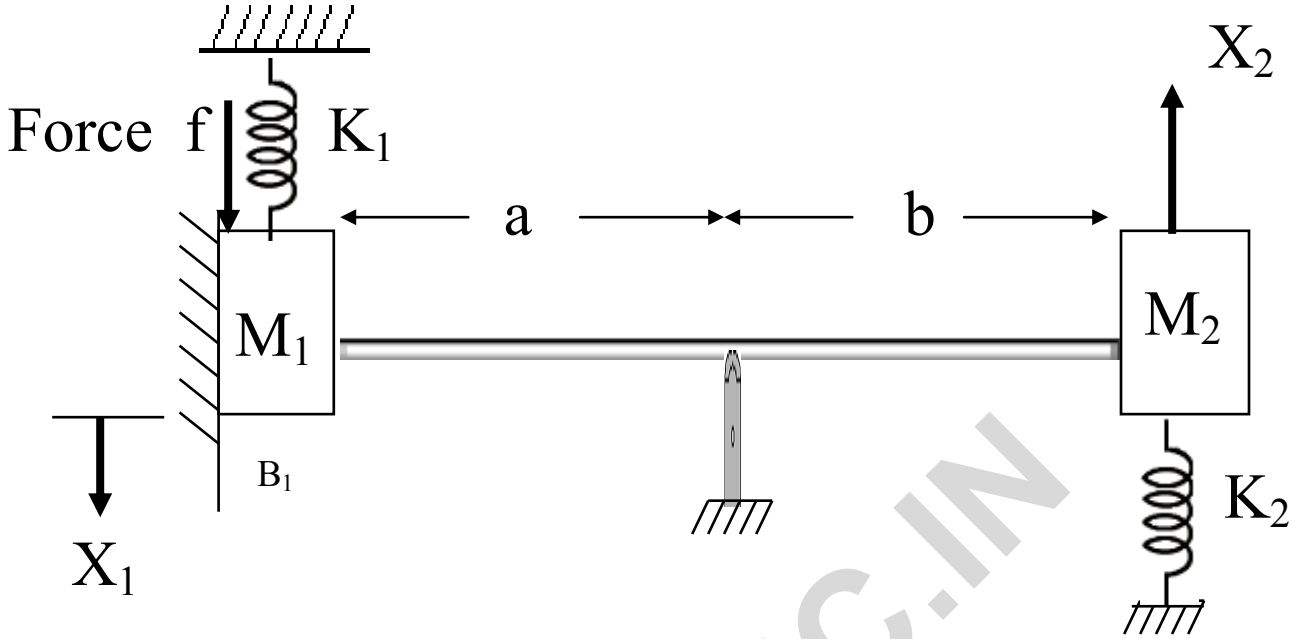

8. Write the force equations for the mechanical systems shown in figure.

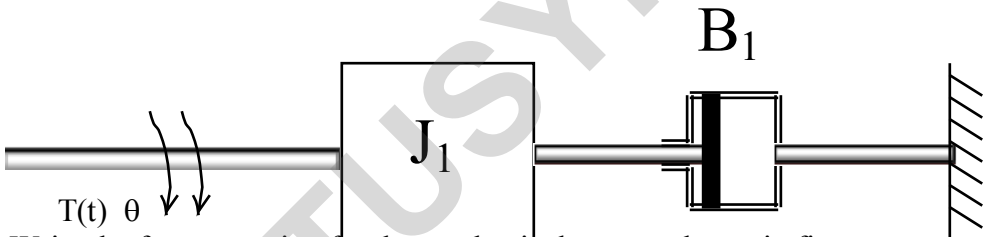

9. Write the force equation for the mechanical system shown in figure.

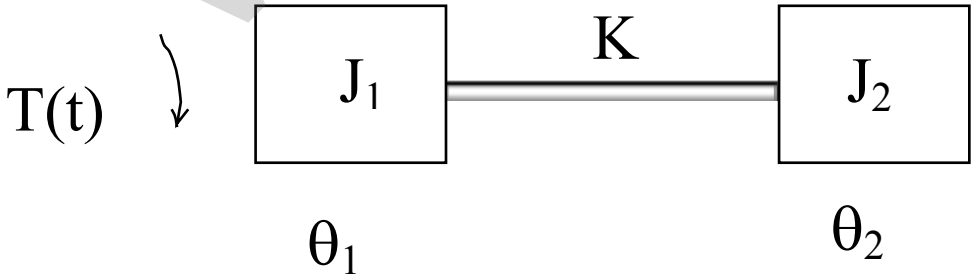

10. Write the force equation for the mechanical system shown in figure.

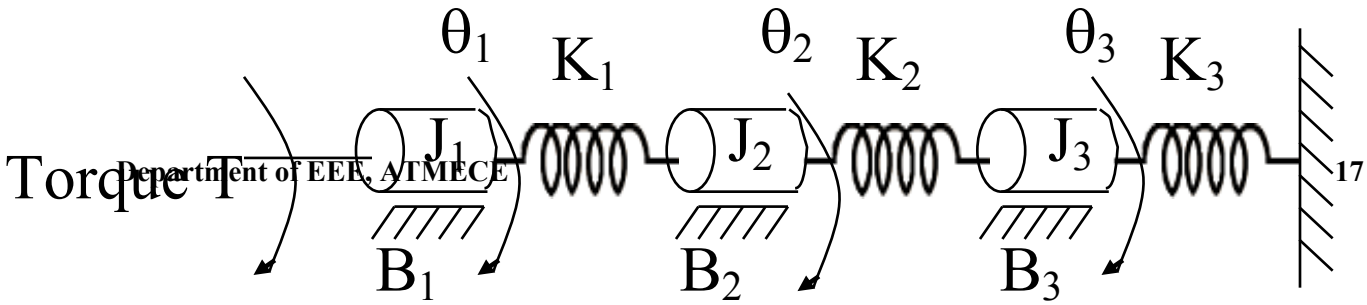

VTUSYNC.IN

11. Torque T(t) is applied to a small cylinder with moment of inertia J_1 which rotates with in a larger cylinder with moment of inertia J_2. The two cylinders are coupled by viscous friction B1. The outer cylinder has viscous friction B_2 between it and the reference frame and is restrained by a torsion spring k. write the describing differential equations.

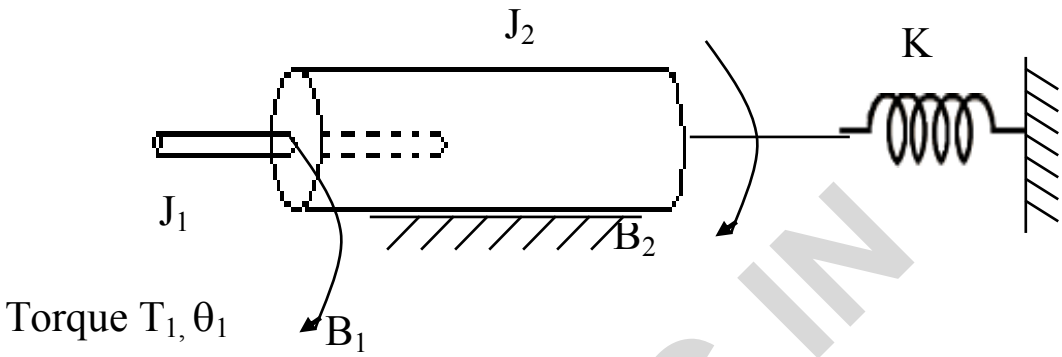

12. The polarized relay shown exerts a force $f(t) = K_i\, i(t)$ upon the pivoted bar. Assume the relay coil has constant inductance L. The left end of the pivot bar is connected to the reference frame through a viscous damper B_1 to retard rapid motion of the bar. Assume the bar has negligible mass and moment of inertia and also that all displacements are small. Write the describing differential equations. Note that the relay coil is not free to move.

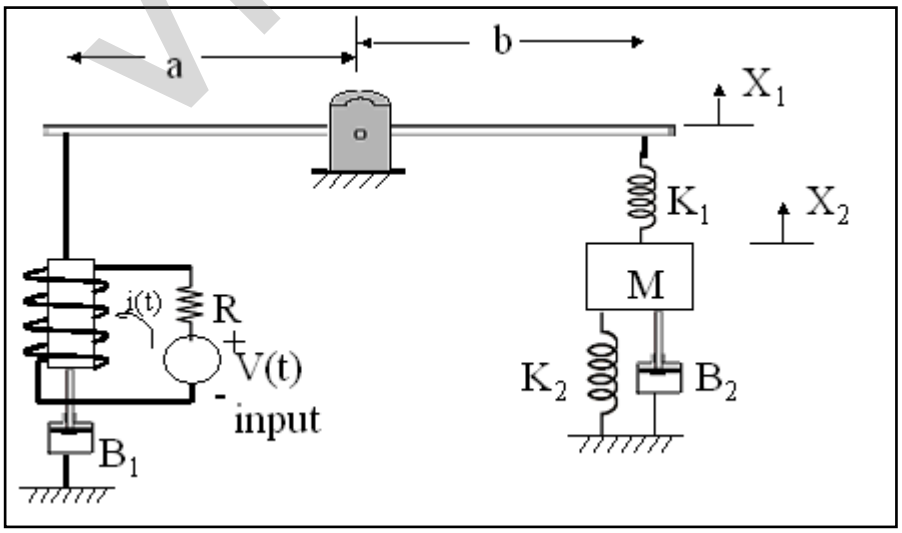

VTUSYNC.IN

13. Figure shows a control scheme for controlling the azimuth angle of an armature controlled dc. Motion with dc generator used as an amplifier. Determine transfer function

$$\frac{\theta_L(s)}{u(s)}$$

. The parameters of the plant are given below.

Motor torque constant = KT in N.M /amp
Motor back emf constant = K_B in V/ rad / Sec
Generator gain constant = K_G in v/ amp
Motor to load gear ratio = $\frac{N_2}{N_1}$
Resistance of the circuit = R in ohms.

Inductance of the circuit = L in Henry

Moment of inertia of motor = J

Viscous friction coefficient = B

Field resistance = R_f

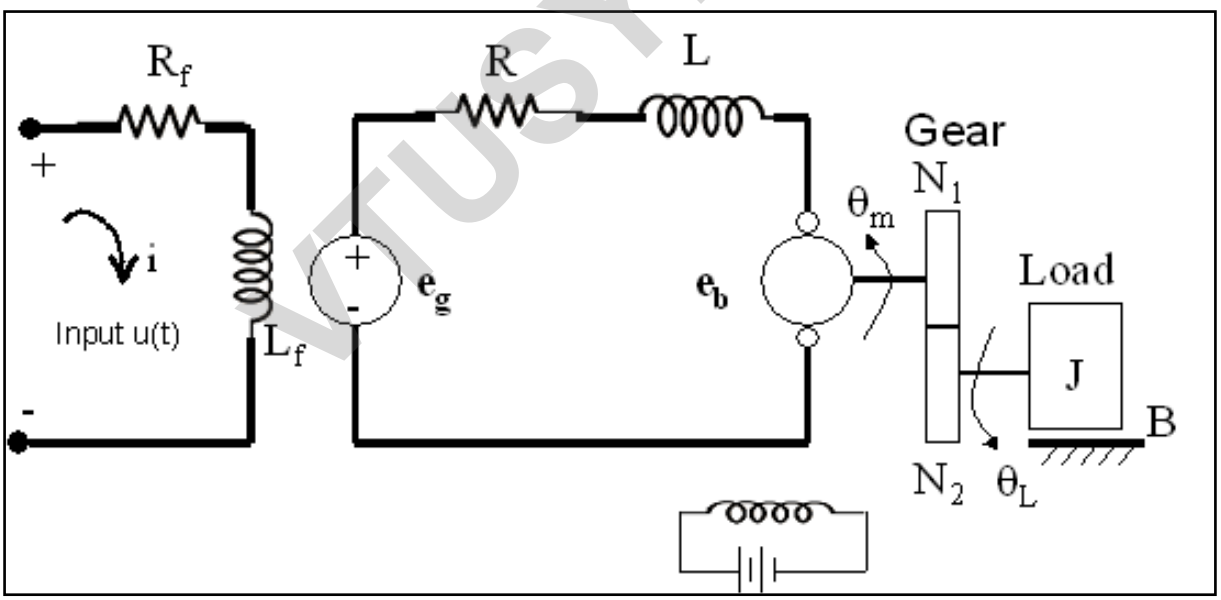

Field inductance = L_f

VTUSYNC.IN

14. The schematic diagram of a dc motor control system is shown in figure where K_s is error detector gain in volt/rad, k is the amplifier gain, K_b back emf constant, K_t is torque

constant, n is the gear train ratio = $\frac{\theta_2}{\theta_1} = \frac{T_m}{T_2}$ B_m = motion friction constant

J_m = motor inertia, K_L = Torsional spring constant J_L = load inertia.

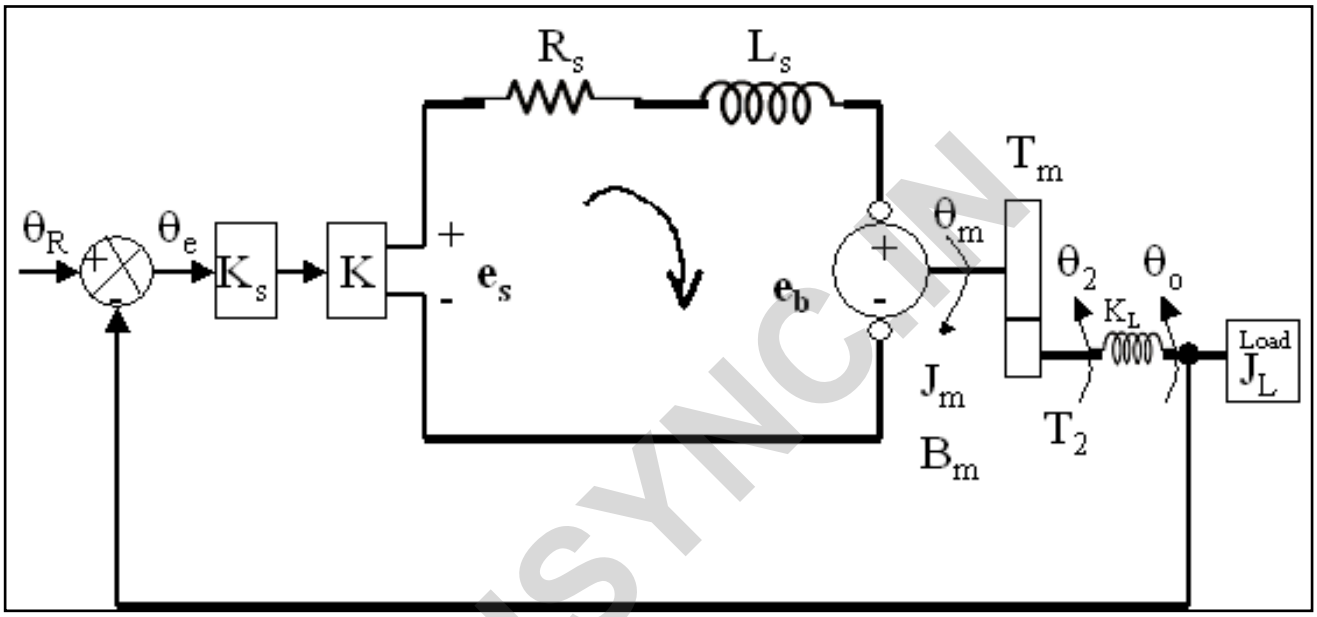

15. Obtain a transfer function C(s) /R(s) for the positional servomechanism shown in figure. Assume that the input to the system is the reference shaft position (R) and the system output is the output shaft position (C). Assume the following constants.

Gain of the potentiometer (error detector) K_1 in V/rad

Amplifier gain _K_p ‘ in V / V

Motor torque constant _K_T ‘ in V/ rad

Gear ratio N_1 / N_2

Moment of inertia of load _J‘

VTUSYNC.IN

Viscous friction coefficient _f'

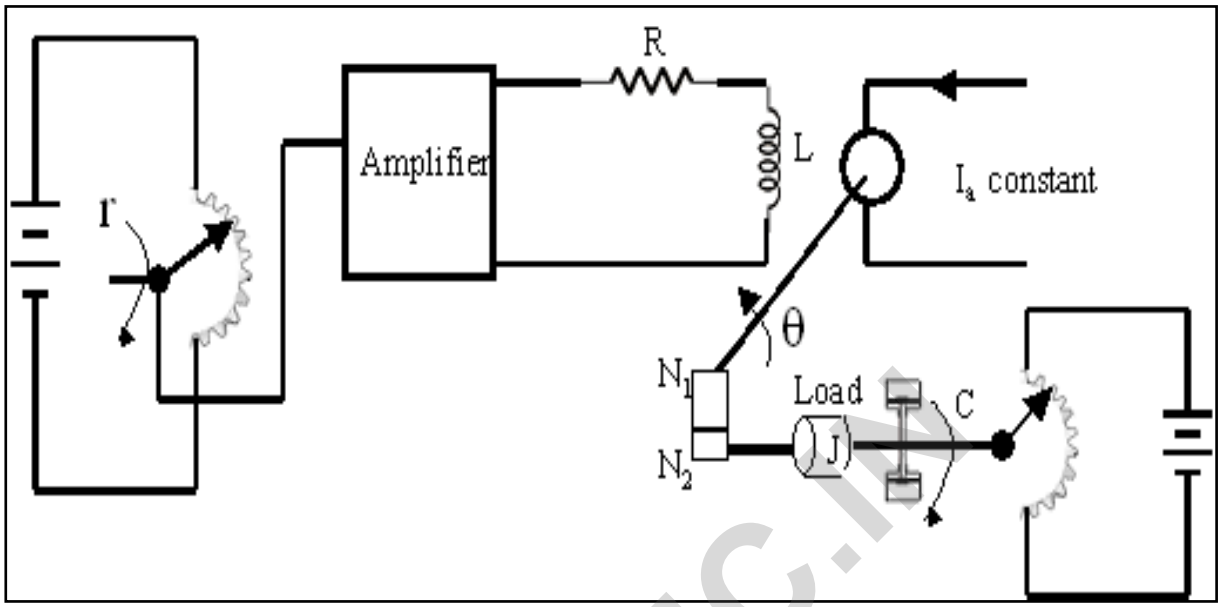

16. Find the transfer function E_0 (s) / I(s)

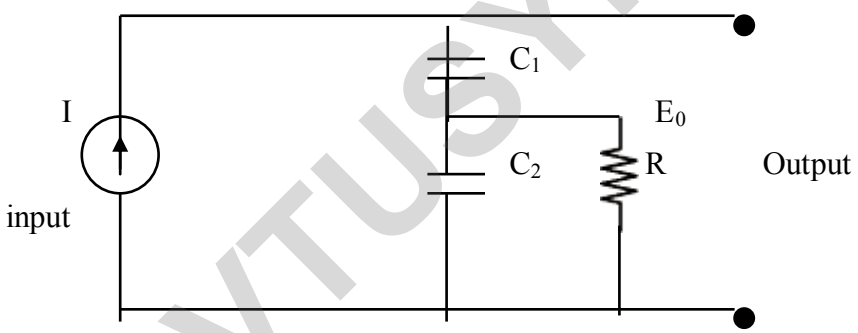

VTUSYNC.IN

Recommended Questions :

1. Name three applications of control systems.
2. Name three reasons for using feedback control systems and at least one reason for not using them.
3. Give three examples of open- loop systems.
4. Functionally, how do closed – loop systems differ from open loop systems.
5. State one condition under which the error signal of a feedback control system would not be the difference between the input and output.
6. Name two advantages of having a computer in the loop.
7. Name the three major design criteria for control systems.
8. Name the two parts of a system‘s response.
9. Physically, what happens to a system that is unstable?
10. Instability is attributable to what part of the total response.
11. What mathematical model permits easy interconnection of physical systems?
12. To what classification of systems can the transfer function be best applied?
13. What transformation turns the solution of differential equations into algebraic manipulations ?
14. Define the transfer function.
15. What assumption is made concerning initial conditions when dealing with transfer functions?
16. What do we call the mechanical equations written in order to evaluate the transfer function ?
17. Why do transfer functions for mechanical networks look identical to transfer functions for electrical networks?
18. What function do gears and levers perform.
19. What are the component parts of the mechanical constants of a motor‘s transfer function?

VTUSYNC.IN

MODULE - 2

2.1 Block Diagram:

A control system may consist of a number of components. In order to show the functions performed by each component in control engineering, we commonly use a diagram called the ―Block Diagram".

A block diagram of a system is a pictorial representation of the function performed by each component and of the flow of signals. Such a diagram depicts the inter-relationships which exists between the various components. A block diagram has the advantage of indicating more realistically the signal flows of the actual system.

In a block diagram all system variables are linked to each other through functional blocks. The ―Functional Block" or simply ―Block" is a symbol for the mathematical operation on the input signal to the block which produces the output. The transfer functions of the components are usually entered in the corresponding blocks, which are connected by arrows to indicate the direction of flow of signals. Note that signal can pass only in the direction of arrows. Thus a block diagram of a control system explicitly shows a unilateral property.

Fig 2.1 shows an element of the block diagram. The arrow head pointing towards the block indicates the input and the arrow head away from the block represents the output. Such arrows are entered as signals.

Fig 2.1

The advantages of the block diagram representation of a system lie in the fact that it is easy to form the over all block diagram for the entire system by merely connecting the blocks of the components according to the signal flow and thus it is possible to evaluate the contribution of each component to the overall performance of the system. A block diagram contains information concerning dynamic behavior but does not contain any information concerning the physical construction of the system. Thus many dissimilar and unrelated system can be represented by the same block diagram.

VTUSYNC.IN

It should be noted that in a block diagram the main source of energy is not explicitly shown and also that a block diagram of a given system is not unique. A number of a different block diagram may be drawn for a system depending upon the view point of analysis.

Error detector : The error detector produces a signal which is the difference between the reference input and the feed back signal of the control system. Choice of the error detector is quite important and must be carefully decided. This is because any imperfections in the error detector will affect the performance of the entire system. The block diagram representation of the error detector is shown in fig2.2

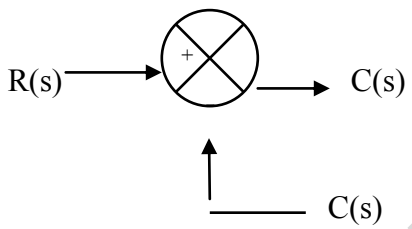

Fig2.2

Note that a circle with a cross is the symbol which indicates a summing operation. The plus or minus sign at each arrow head indicates whether the signal is to be added or subtracted. Note that the quantities to be added or subtracted should have the same dimensions and the same units.

2.2 Block diagram of a closed loop system .

Fig2.3 shows an example of a block diagram of a closed system

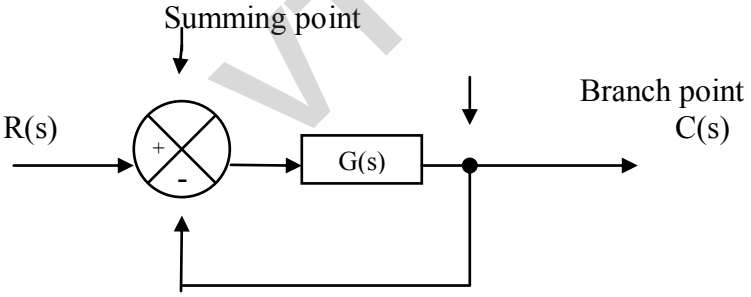

Fig. 2.3

The output C(s) is fed back to the summing point, where it is compared with reference input R(s). The closed loop nature is indicated in fig1.3. Any linear system may be represented by a block diagram consisting of blocks, summing points and branch points. A branch is the point from which the output signal from a block diagram goes concurrently to other blocks or summing points.

VTUSYNC.IN

When the output is fed back to the summing point for comparison with the input, it is necessary to convert the form of output signal to that of he input signal. This conversion is followed by the feed back element whose transfer function is H(s) as shown in fig 1.4. Another important role of the feed back element is to modify the output before it is compared with the input.

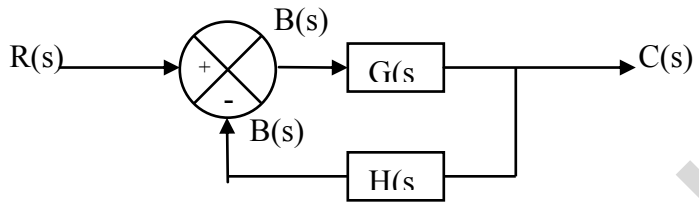

Fig 2.4

The ratio of the feed back signal B(s) to the actuating error signal E(s) is called the open loop transfer function.

open loop transfer function = B(s)/E(s) = G(s)H(s)

The ratio of the output C(s) to the actuating error signal E(s) is called the feed forward transfer function .

Feed forward transfer function = C(s)/E(s) = G(s)

If the feed back transfer function is unity, then the open loop and feed forward transfer function are the same. For the system shown in Fig1.4, the output C(s) and input R(s) are related as follows.

$$C(s) = G(s)\,E(s)$$

$$E(s) = R(s) - B(s)$$

$$= R(s) - H(s)\,C(s) \qquad \text{but } B(s) = H(s)C(s)$$

Eliminating E(s) from these equations

$$C(s) = G(s)\,[R(s) - H(s)\,C(s)]$$

$$C(s) + G(s)\,[H(s)\,C(s)] = G(s)\,R(s)$$

$$C(s)[1 + G(s)H(s)] = G(s)R(s)$$

VTUSYNC.IN

$$\frac{C(s)}{R(s)} = \frac{G(s)}{1 + G(s)\,H(s)}$$

C(s)/R(s) is called the closed loop transfer function.

The output of the closed loop system clearly depends on both the closed loop transfer function and the nature of the input. If the feed back signal is positive, then

$$\frac{C(s)}{R(s)} = \frac{G(s)}{1 - G(s)\,H(s)}$$

2.3 Closed loop system subjected to a disturbance

Fig2.5 shows a closed loop system subjected to a disturbance. When two inputs are present in a linear system, each input can be treated independently of the other and the outputs corresponding to each input alone can be added to give the complete output. The way in which each input is introduced into the system is shown at the summing point by either a plus or minus sign.

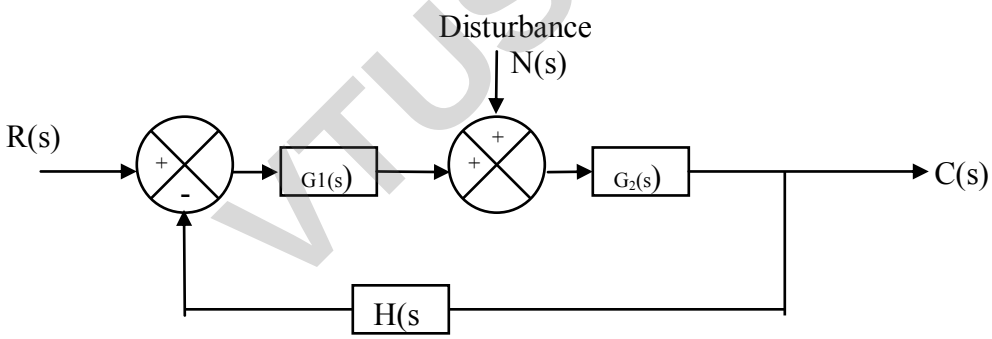

Fig2.5

Fig2.5 closed loop system subjected to a disturbance.

Consider the system shown in fig 2.5. We assume that the system is at rest initially with zero error. Calculate the response $C_N(s)$ to the disturbance only. Response is

$$\frac{C_N(s)}{R(s)} = \frac{G_2(s)}{1 + G_1(s)G_2(s)H(s)}$$

On the other hand, in considering the response to the reference input R(s), we may assume that the disturbance is zero. Then the response CR(s) to the reference input R(s)is

VTUSYNC.IN

$$\frac{CR(s)}{R(s)} = \frac{G_1(s)G_2(s)}{1 + G_1(s)G_2(s)H(s).}$$

The response C(s) due to the simultaneous application of the reference input R(s) and the disturbance N(s) is given by

$$C(s) = C_R(s) + C_N(s)$$

$$C(s) = \frac{G_2(s)}{1 + G_1(s)G_2(s)H(s)} [G_1(s)R(s) + N(s)]$$

2.4 **Procedure for drawing block diagram :**

To draw the block diagram for a system, first write the equation which describes the dynamic behaviour of each components. Take the laplace transform of these equations, assuming zero initial conditions and represent each laplace transformed equation individually in the form of block. Finally assemble the elements into a complete block diagram.

As an example consider the Rc circuit shown in fig2.6 (a). The equations for the circuit shown are

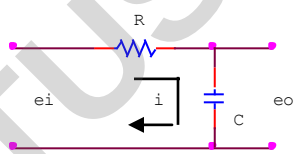

Fig. 2.6a

$e_i = iR + 1/c\int idt$ ----------(1)

And

$e_o = 1/c\int idt$ ---------(2)

Equation (1) becomes

$e_i = iR + e_o$

$$\frac{e_i - e_o}{R} = i \quad \text{----------(3)}$$

VTUSYNC.IN

Laplace transforms of equations (2) & (3) are

$$Eo(s) = 1/CsI(s) \quad \text{----------(4)}$$

$$\frac{Ei(s) - Eo(s)}{R} = I(s) \quad \text{-------- (5)}$$

Equation (5) represents a summing operation and the corresponding diagram is shown in fig1.6 (b). Equation (4) represents the block as shown in fig2.6(c). Assembling these two elements, the overall block diagram for the system shown in fig2.6(d) is obtained.

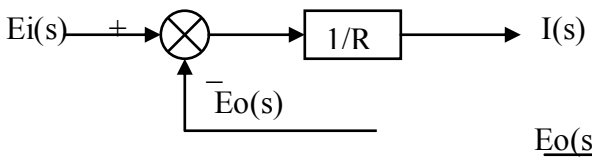

Fig2.6(b)

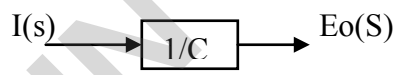

Fig2.6(c)

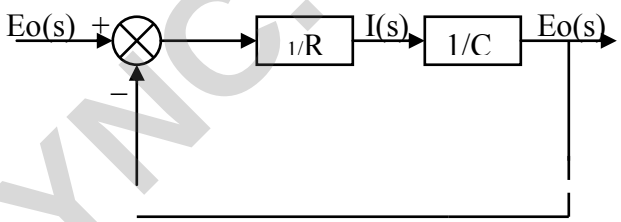

Fig2.6(d)

VTUSYNC.IN

2. SIGNAL FLOW GRAPHS

An alternate to block diagram is the signal flow graph due to S. J. Mason. A signal flow graph is a diagram that represents a set of simultaneous linear algebraic equations. Each signal flow graph consists of a network in which nodes are connected by directed branches. Each node represents a system variable, and each branch acts as a signal multiplier. The signal flows in the direction indicated by the arrow.

Definitions:

Node: A node is a point representing a variable or signal.

Branch: A branch is a directed line segment joining two nodes.

Transmittance: It is the gain between two nodes.

Input node: A node that has only outgoing branche(s). It is also, called as source and corresponds to independent variable.

Output node: A node that has only incoming branches. This is also called as sink and corresponds to dependent variable.

Mixed node: A node that has incoming and out going branches.

Path: A path is a traversal of connected branches in the direction of branch arrow.

Loop: A loop is a closed path.

Self loop: It is a feedback loop consisting of single branch.

Loop gain: The loop gain is the product of branch transmittances of the loop.

Nontouching loops: Loops that do not posses a common node.

Forward path: A path from source to sink without traversing an node more than once.

Feedback path: A path which originates and terminates at the same node.

Forward path gain: Product of branch transmittances of a forward path.

Properties of Signal Flow Graphs:

1) Signal flow applies only to linear systems.
2) The equations based on which a signal flow graph is drawn must be algebraic equations in the form of effects as a function of causes. Nodes are used to represent variables. Normally the nodes are arranged left to right, following a succession of causes and effects through the system.
3) Signals travel along the branches only in the direction described by the arrows of the branches.
4) The branch directing from node X_k to X_j represents dependence of the variable Xj on X_k but not the reverse.
5) The signal traveling along the branch X_k and X_j is multiplied by branch gain a_{kj} and signal $a_{kj}X_k$ is delivered at node X_j.

VTUSYNC.IN

2.1.1 Guidelines to Construct the Signal Flow Graphs:

The signal flow graph of a system is constructed from its describing equations, or by direct reference to block diagram of the system. Each variable of the block diagram becomes a node and each block becomes a branch. The general procedure is

1) Arrange the input to output nodes from left to right.
2) Connect the nodes by appropriate branches.
3) If the desired output node has outgoing branches, add a dummy node and a unity gain branch.
4) Rearrange the nodes and/or loops in the graph to achieve pictorial clarity.

Signal Flow Graph Algebra

Addtion rule
The value of the variable designated by a node is equal to the sum of all signals entering the node.
Transmission rule
The value of the variable designated by a node is transmitted on every branch leaving the node.
Multiplication rule
A cascaded connection of n-1 branches with transmission functions can be replaced by a single branch with new transmission function equal to the product of the old ones.

Mason's Gain Formula

The relationship between an input variable and an output variable of a signal flow graph is given by the net gain between input and output nodes and is known as overall gain of the system. Masons gain formula is used to obtain the over all gain (transfer function) of signal flow graphs.

Gain P is given by

$$P = \frac{1}{\Delta}\sum_k P_k \Delta_k$$

Where, P_k is gain of kth forward path,
Δ is determinant of graph

Δ=1-(sum of all individual loop gains)+(sum of gain products of all possible combinations of two nontouching loops – sum of gain products of all possible combination of three nontouching loops) + ···

Δ_k is cofactor of kth forward path determinant of graph with loops touching k^{th} forward path. It is obtained from Δ by removing the loops touching the path P_k.

Example1
Draw the signal flow graph of the block diagram shown in Fig.2.7

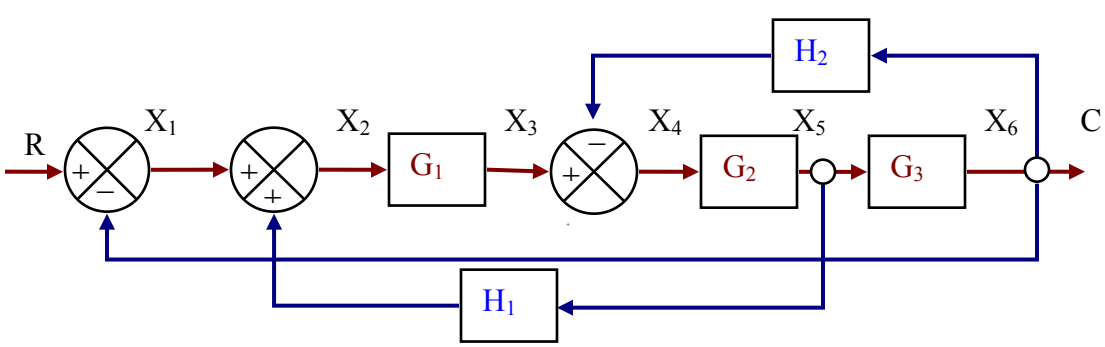

Figure 2.7 Multiple loop system

VTUSYNC.IN

Choose the nodes to represent the variables say X_1 .. X_6 as shown in the block diagram.
Connect the nodes with appropriate gain along the branch. The signal flow graph is shown in Fig. 2.7

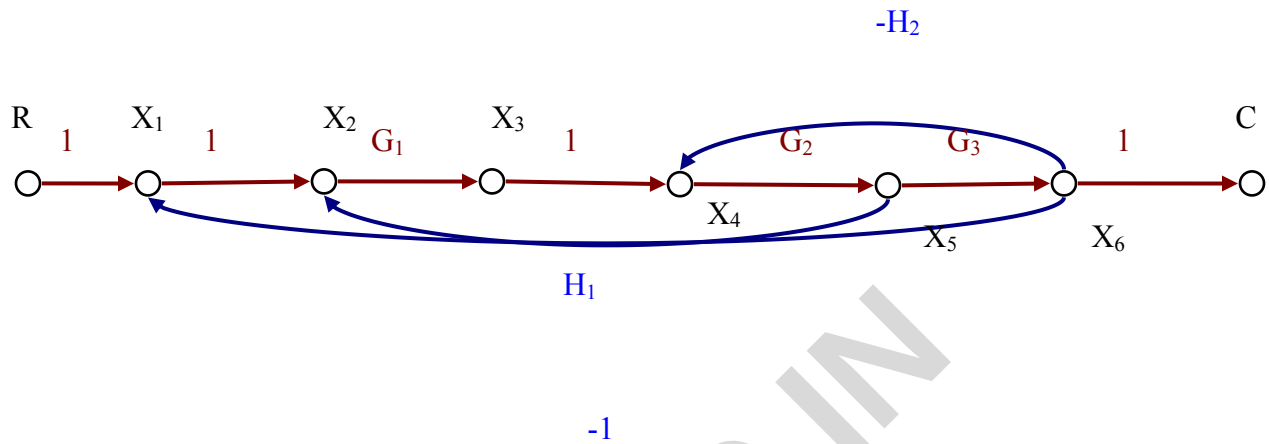

Figure 1.8 Signal flow graph of the system shown in Fig. 2.7

Example 2.9

Draw the signal flow graph of the block diagram shown in Fig.2.9.

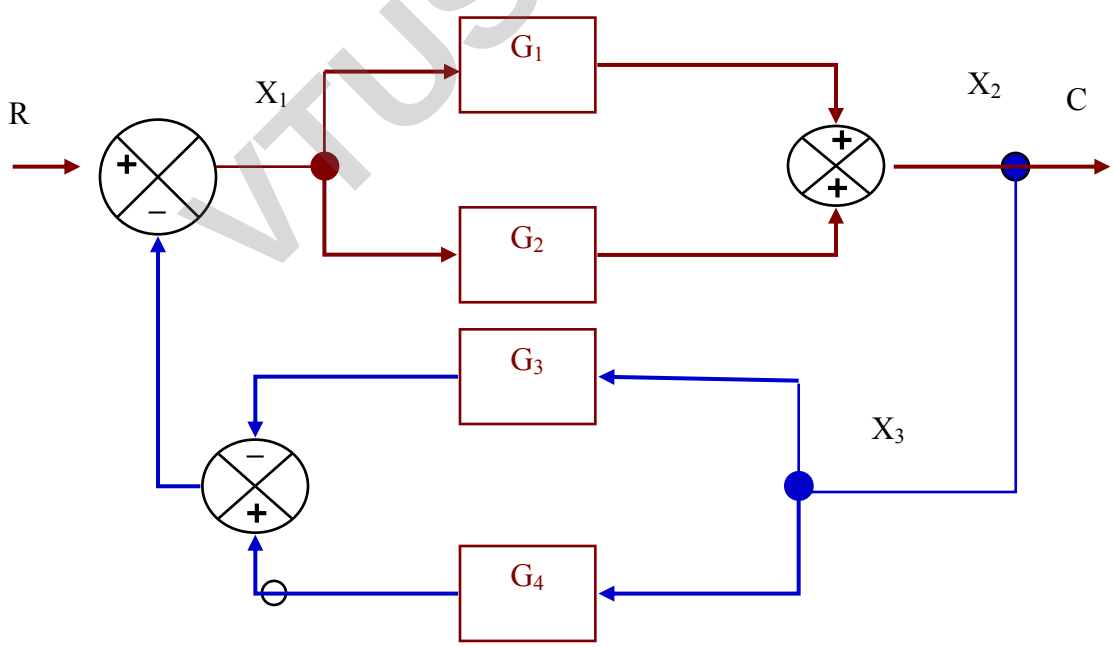

Figure 2.9 Block diagram feedback system

VTUSYNC.IN

The nodal variables are X_1, X_2, X_3.
The signal flow graph is shown in Fig. 2.10.

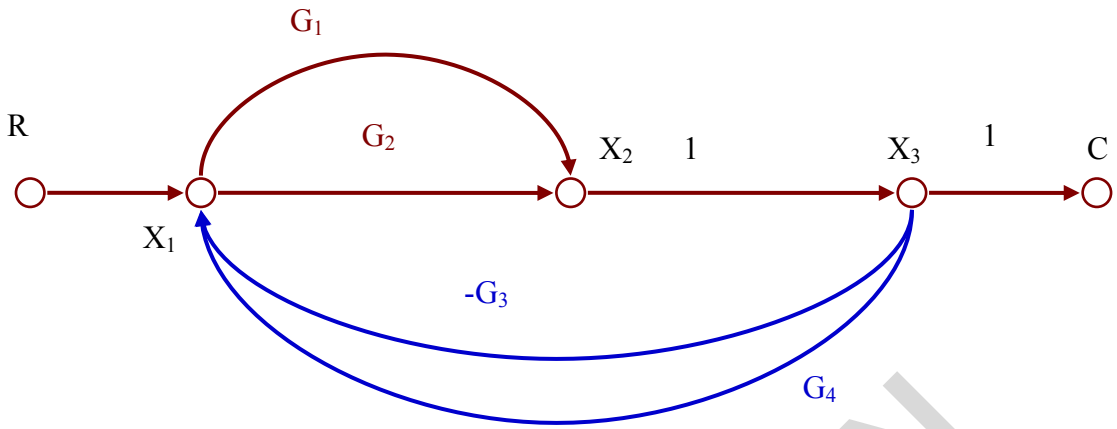

Figure 2.10 Signal flow graph of example 2

Example 3
Draw the signal flow graph of the system of equations.

$$X_1 = a_{11}X_1 + a_{12}X_2 + a_{13}X_3 + b_1u_1$$
$$X_2 = a_{21}X_1 + a_{22}X_2 + a_{23}X_3 + b_2u_2$$
$$X_3 = a_{31}X_1 + a_{32}X_2 + a_{33}X_3$$

The variables are X_1, X_2, X_3, u_1 and u_2 choose five nodes representing the variables.
Connect the various nodes choosing appropriate branch gain in accordance with the equations.
The signal flow graph is shown in Fig. 2.11.

VTUSYNC.IN

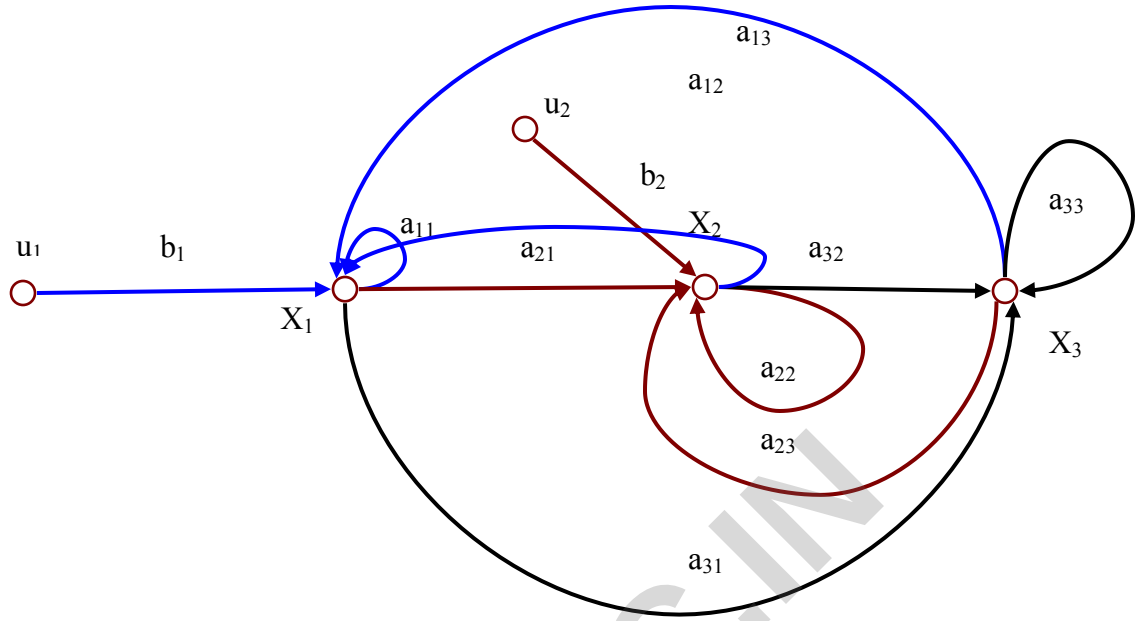

Figure 2.11 Signal flow graph of example 2

Example 4

LRC net work is shown in Fig. 2.12. Draw its signal flow graph.

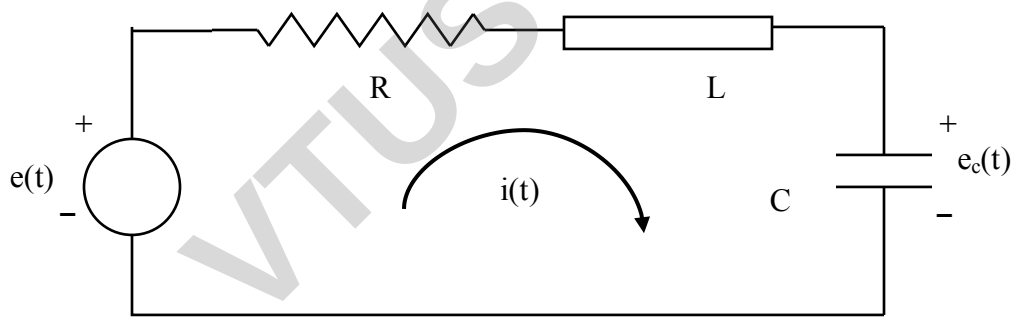

Figure 2.12 LRC network

The governing differential equations are

$$L\frac{di}{dt} + Ri + \frac{1}{C}\int idt = e(t)\cdots(1)$$

or

$$L\frac{di}{dt} + Ri + e_c = e(t)\cdots(2)$$

$$C\frac{de_c}{dt} = i(t)\cdots(3)$$

Taking Laplace transform of Eqn.1 and Eqn.2 and dividing Eqn.2 by L and Eqn.3 by C

VTUSYNC.IN

$$sI(s) - i(0^+) + \frac{R}{L} I(S) + \frac{1}{L} E_c(s) = \frac{1}{L} E(s) \cdots (4)$$

$$sE_c(s) - e_c(0^+) = \frac{1}{C} I(s) \cdots (5)$$

Eqn.4 and Eqn.5 are used to draw the signal flow graph shown in Fig.7.

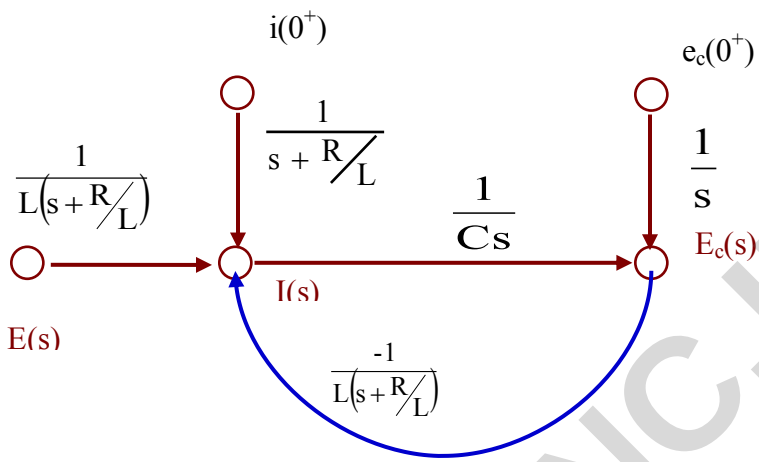

Figure 2.12 Signal flow graph of LRC system

VTUSYNC.IN

2.3 SIGNAL FLOW GRAPHS

The relationship between an input variable and an output variable of a signal flow graph is given by the net gain between input and output nodes and is known as overall gain of the system. Masons gain formula is used to obtain the over all gain (transfer function) of signal flow graphs.

Mason's Gain Formula

Gain P is given by

$$P = \frac{1}{\Delta}\sum_k P_k \Delta_k$$

Where, P_k is gain of kth forward path,
Δ is determinant of graph

Δ=1-(sum of all individual loop gains) + (sum of gain products of all possible combinations of two nontouching loops – sum of gain products of all possible combination of three nontouching loops) + ···

Δ_k is cofactor of kth forward path determinant of graph with loops touching k^{th} forward path. It is obtained from Δ by removing the loops touching the path P_k.

Example 1
Obtain the transfer function of C/R of the system whose signal flow graph is shown in Fig.2.13

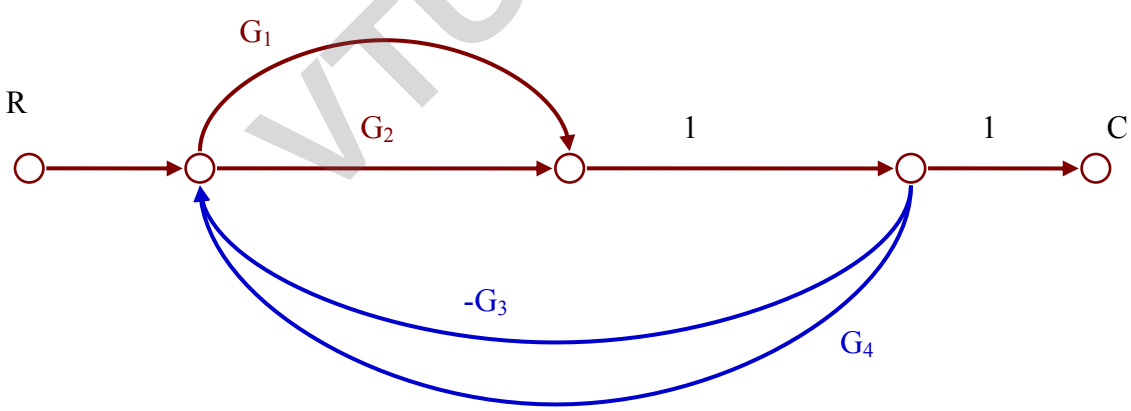

Figure 2.13 Signal flow graph of example 1

There are two forward paths:
Gain of path 1 : $P_1=G_1$
Gain of path 2 : $P_2=G_2$

VTUSYNC.IN

There are four loops with loop gains:
$L_1=-G_1G_3$, $L_2=G_1G_4$, $L_3= -G_2G_3$, $L_4= G_2G_4$
There are no non-touching loops.
$\Delta = 1+G_1G_3-G_1G_4+G_2G_3-G_2G_4$
Forward paths 1 and 2 touch all the loops. Therefore, $\Delta_1= 1$, $\Delta_2= 1$

The transfer function $T = \dfrac{C(s)}{R(s)} = \dfrac{P_1\Delta_1 + P_2\Delta_2}{\Delta} = \dfrac{G_1 + G_2}{1 + G_1G_3 - G_1G_4 + G_2G_3 - G_2G_4}$

Example 2
Obtain the transfer function of C(s)/R(s) of the system whose signal flow graph is shown in Fig.2.14.

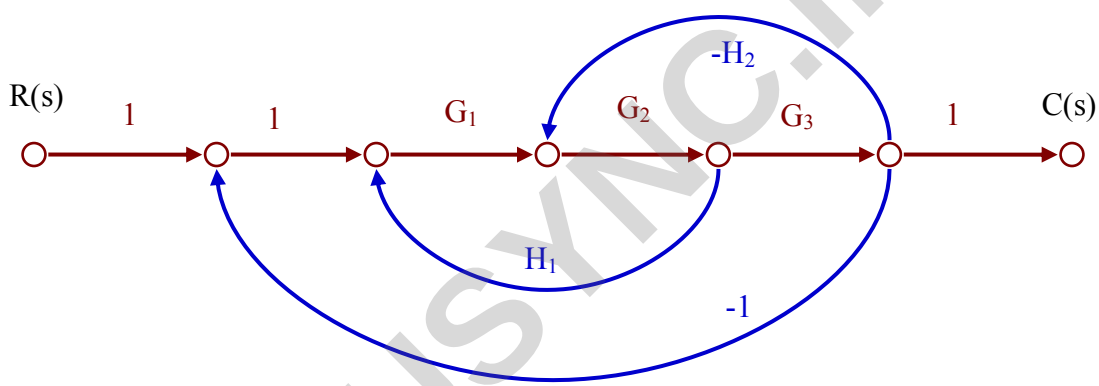

Figure 2.14 Signal flow graph of example 2

There is one forward path, whose gain is: $P_1=G_1G_2G_3$
There are three loops with loop gains:
$L_1=-G_1G_2H_1$, $L2=G_2G_3H_2$, $L3= -G_1G_2G_3$
There are no non-touching loops.
$\Delta = 1-G_1G_2H_1+G_2G_3H_2+G_1G_2G_3$
Forward path 1 touches all the loops. Therefore, $\Delta_1= 1$.
The transfer function $T = \dfrac{C(s)}{R(s)} = \dfrac{P_1\Delta_1}{\Delta} = \dfrac{G_1G_2G_3}{1 - G_1G_2H_1 + G_1G_3H_2 + G_1G_2G_3}$

Example 3
Obtain the transfer function of C(s)/R(s) of the system whose signal flow graph is shown in Fig.2.15.

VTUSYNC.IN

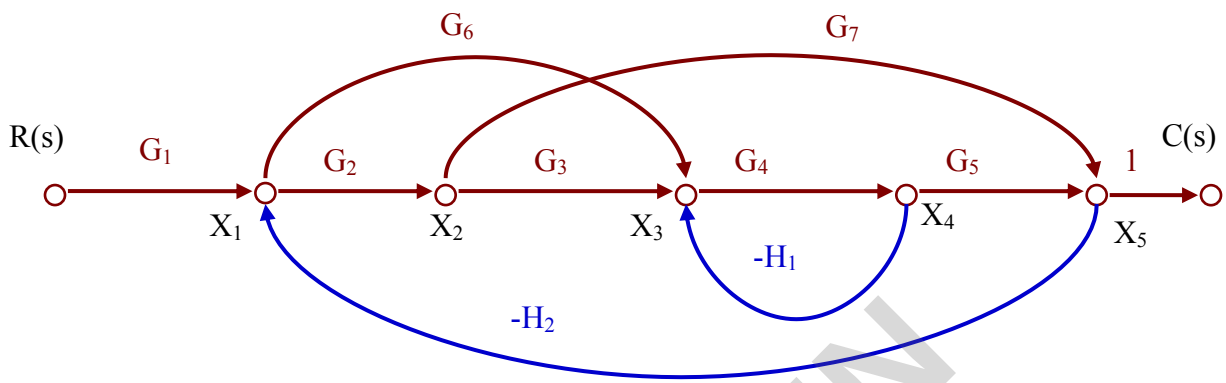

Figure 2.15 Signal flow graph of example 3

There are three forward paths.
The gains of the forward path are: $P_1=G_1G_2G_3G_4G_5$
$P_2=G_1G_6G_4G_5$
$P_3=G_1G_2G_7$
There are four loops with loop gains:
$L_1=-G_4H_1$, $L_2=-G_2G_7H_2$, $L3= -G_6G_4G_5H_2$, $L_4=-G_2G_3G_4G_5H_2$
There is one combination of Loops L_1 and L_2 which are nontouching with loop gain product $L_1L_2=G_2G_7H_2G_4H_1$
$\Delta = 1+G_4H_1+G_2G_7H_2+G_6G_4G_5H_2+G_2G_3G_4G_5H_2+ G_2G_7H_2G_4H_1$
Forward path 1 and 2 touch all the four loops. Therefore $\Delta_1= 1$, $\Delta_2= 1$.
Forward path 3 is not in touch with loop1. Hence, $\Delta_3= 1+G_4H_1$.

The transfer function

T= C(s) / R(s)

$$\frac{C(s)}{R(s)}=\frac{P_1\Delta_1+P_2\Delta_2+P_3\Delta_3}{\Delta}=\frac{G_1G_2G_3G_4G_5+G_1G_4G_5G_6+G_1G_2G_7(1+G_4H_1)}{1+G_4H_1+G_2G_7H_2+G_6G_4G_5H_2+G_2G_3G_4G_5H_2+G_2G_4G_7H_1H_2}$$

VTUSYNC.IN

Example 4

Find the gains $\frac{X_6}{X_1}, \frac{X_5}{X_2}, \frac{X_3}{X_1}$ for the signal flow graph shown in Fig.2.16.

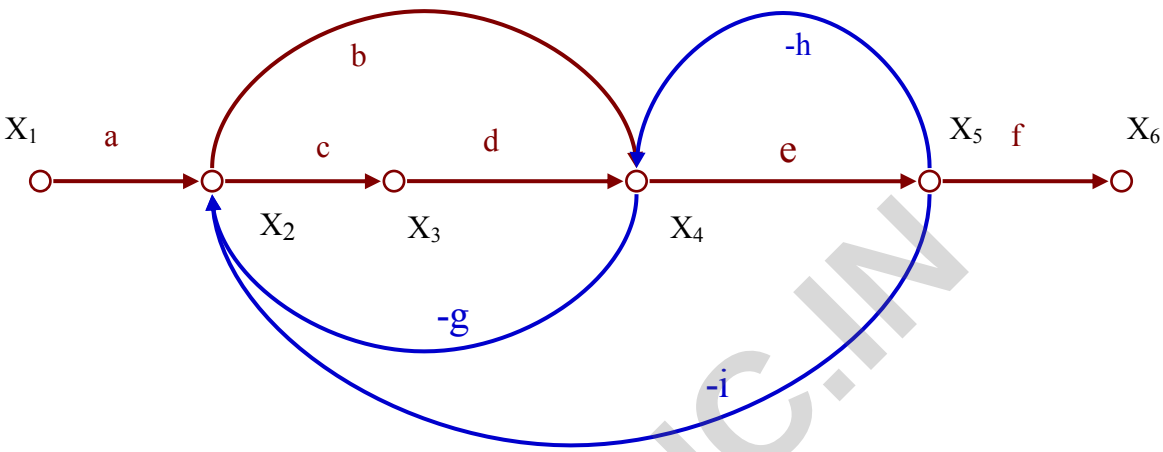

Figure 2.16 Signal flow graph of MIMO system

Case 1: $\frac{X_6}{X_1}$

There are two forward paths.
The gain of the forward path are: P_1=acdef
P_2=abef
There are four loops with loop gains:
L_1=-cg, L_2=-eh, L_3= -cdei, L_4=-bei
There is one combination of Loops L_1 and L_2 which are nontouching with loop gain product L_1L_2=cgeh
Δ = 1+cg+eh+cdei+bei+cgeh
Forward path 1 and 2 touch all the four loops. Therefore Δ_1= 1, Δ_2= 1.

The transfer function T = $\frac{X_6}{X_1} = \frac{P_1\Delta_1 + P_2\Delta_2}{\Delta} = \frac{cdef + abef}{1 + cg + eh + cdei + bei + cgeh}$

VTUSYNC.IN

Case 2: $\frac{X_5}{X_2}$

The modified signal flow graph for case 2 is shown in Fig.2.17.

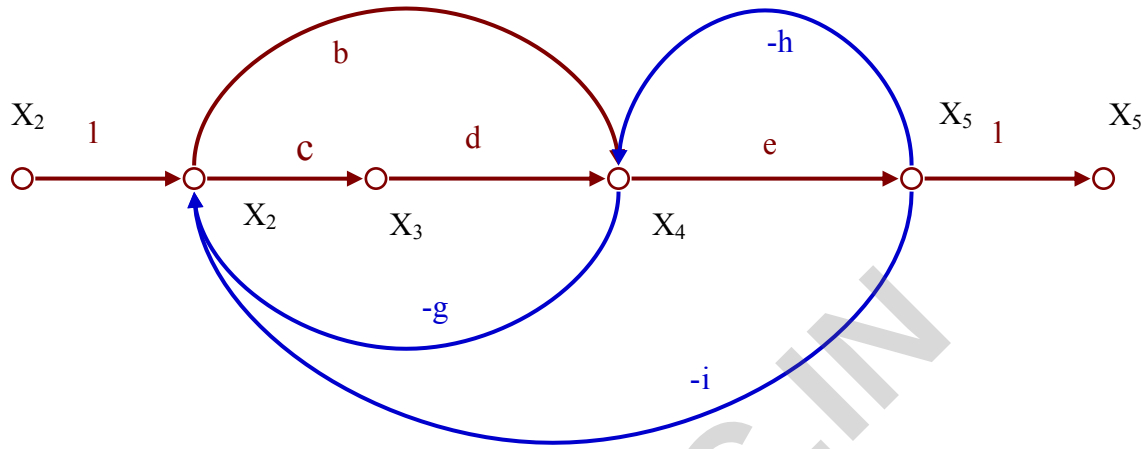

Figure 2.17 Signal flow graph of example 4 case 2

The transfer function can directly manipulated from case 1 as branches a and f are removed which do not form the loops. Hence,

The transfer function T= $\frac{X_5}{X_2} = \frac{P_1\Delta_1 + P_2\Delta_2}{\Delta} = \frac{cde + be}{1 + cg + eh + cdei + bei + cgeh}$

Case 3: $\frac{X_3}{X_1}$

The signal flow graph is redrawn to obtain the clarity of the functional relation as shown in Fig.2.18.

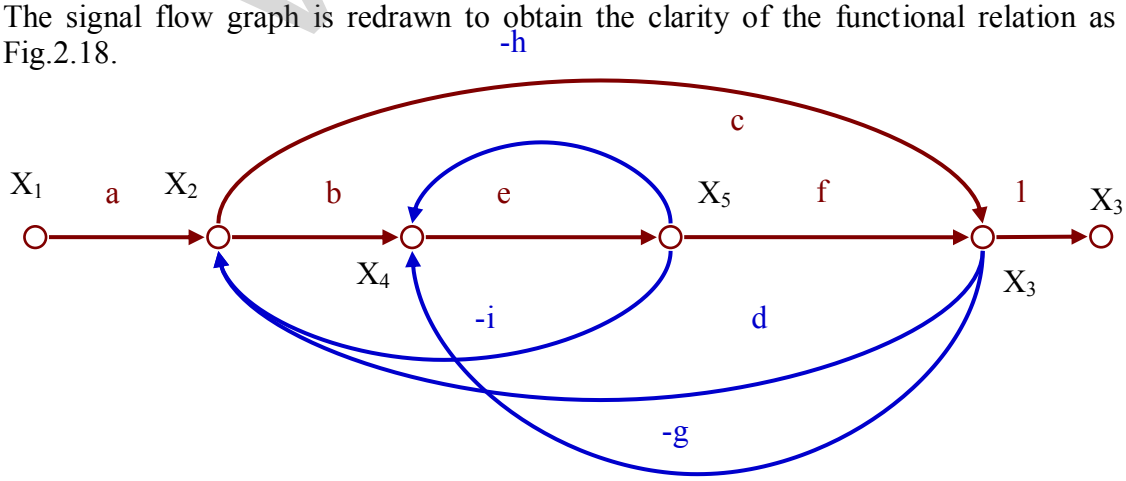

Figure 2.18 Signal flow graph of example 4 case 3

VTUSYNC.IN

There are two forward paths.
The gain of the forward path are: P_1=abcd
P_2=ac
There are five loops with loop gains:
L_1=-eh, L_2=-cg, L_3= -bei, L_4=edf, L_5=-befg
There is one combination of Loops L_1 and L_2 which are nontouching with loop gain product L_1L_2=ehcg
Δ = 1+eh+cg+bei+efd+befg+ehcg
Forward path 1 touches all the five loops. Therefore Δ_1= 1.
Forward path 2 does not touch loop L_1. Hence, Δ_2= 1+ eh

The transfer function T = $\frac{X_3}{X_1} = \frac{P_1\Delta_1 + P_2\Delta_2}{\Delta} = \frac{abef + ac(1+eh)}{1+eh+cg+bei+efd+befg+ehcg}$

Example 5

For the system represented by the following equations find the transfer function X(s)/U(s) using signal flow graph technique.

$$X = X_1 + \beta_3 u$$

$$\dot{X}_1 = -a_1 X_1 + X_2 + \beta_2 u$$

$$X_2 = -a_2 \dot{X}_1 + \beta_1 u$$

Taking Laplace transform with zero initial conditions

$$X(s) = X_1(s) + \beta_3 U(s)$$

$$sX_1(s) = -a_1 X_1(s) + X_2(s) + \beta_2 U(s)$$

$$sX_2(s) = -a_2 X_1(s) + \beta_1 U(s)$$

Rearrange the above equation

$$X(s) = X_1(s) + \beta_3 U(s)$$

$$X_1(s) = \frac{-a_1}{s} X_1(s) + \frac{1}{s} X_2(s) + \frac{\beta_2}{s} U(s)$$

$$X_2(s) = \frac{-a_2}{s} X_1(s) + \frac{\beta_1}{s} U(s)$$

The signal flow graph is shown in Fig.2.19.

VTUSYNC.IN

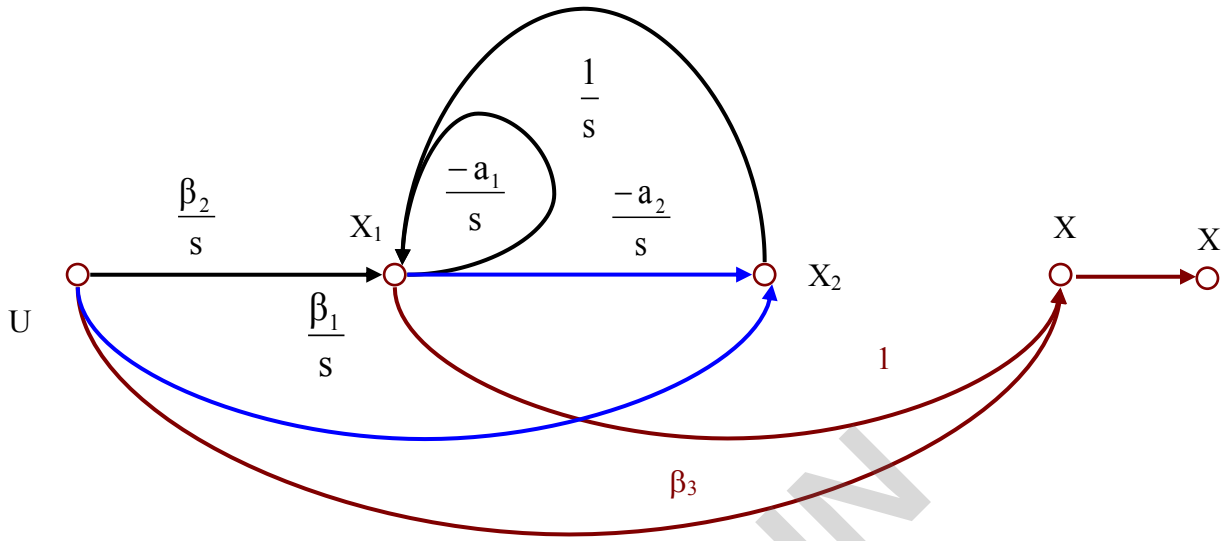

Figure 2.19 Signal flow grapgh of example 5

There are three forward paths.
The gain of the forward path are: $P_1=\beta_3$
$P_2=\beta_1/s^2$
$P_3=\beta_2/s$

There are two loops with loop gains:

$$L_1 = \frac{-a_1}{s}$$

$$L_2 = \frac{-a_2}{s^2}$$

L_1=-eh, L_2=-cg, L_3= -bei, L_4=edf, L_5=-befg

There are no combination two Loops which are nontouching.

$$\Delta = 1 + \frac{a_1}{s} + \frac{a_2}{s^2}$$

Forward path 1 does not touch loops L_1 and L_2. Therefore

$$\Delta_1 = 1 + \frac{a_1}{s} + \frac{a_2}{s^2}$$

Forward path 2 path 3 touch the two loops. Hence, Δ_2= 1, Δ_2= 1.

The transfer function T = $\frac{X_3}{X_1} = \frac{P_1\Delta_1 + P_2\Delta_2 + P_3\Delta_3}{\Delta} = \frac{\beta_3\left(s^2 + a_1 s + a_2\right) + \beta_2 s + \beta_1}{s^2 + a_1 s + a_2}$

VTUSYNC.IN

Recommended Questions:

1. Define block diagram & depict the block diagram of closed loop system.
2. Write the procedure to draw the block diagram.
3. Define signal flow graph and its parameters
4. Explain briefly Mason's Gain formula
5. Draw the signal flow graph of the block diagram shown in Fig below.

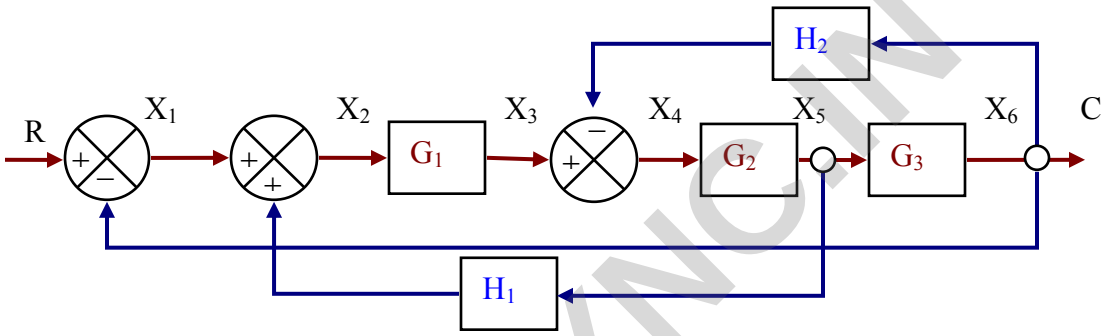

6. Draw the signal flow graph of the block diagram shown in Fig below

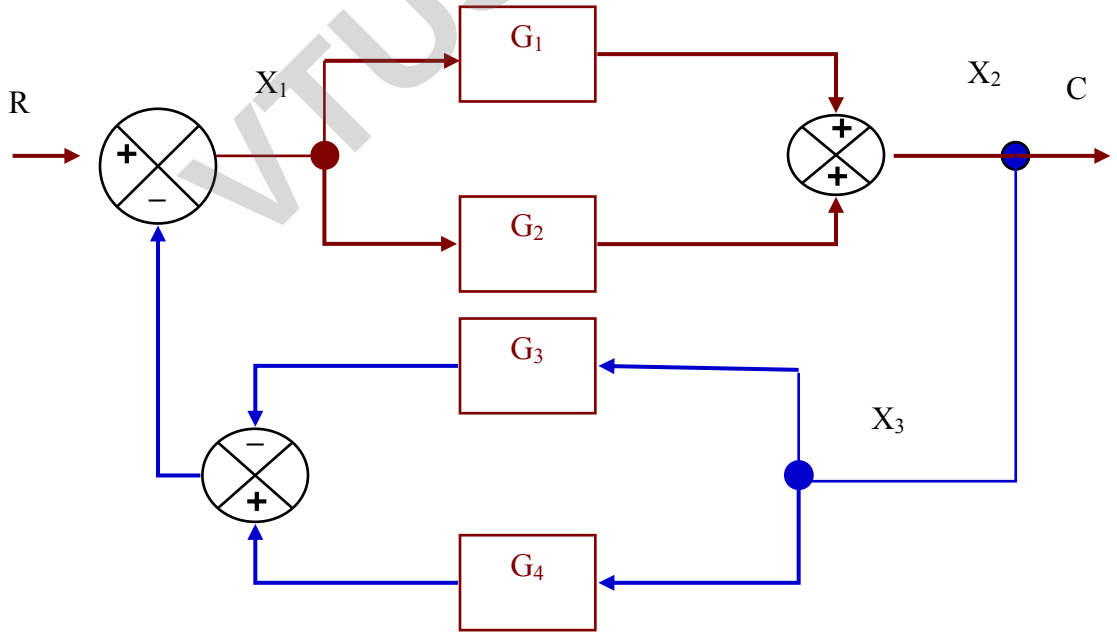

VTUSYNC.IN

7. For the LRC net work is shown in Fig Draw its signal flow graph.

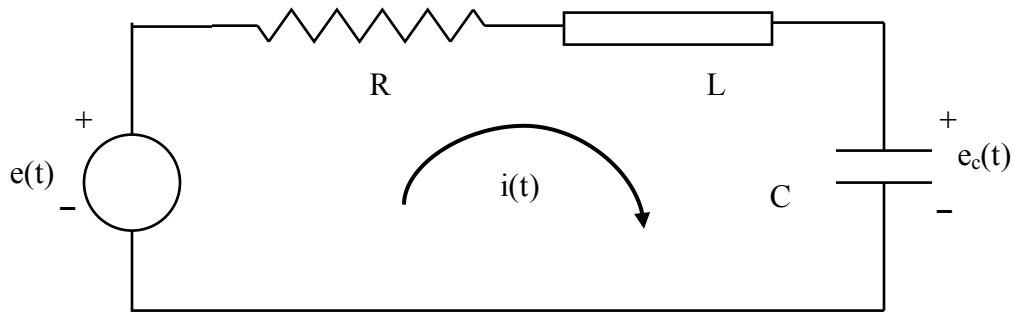

Figure

8. Obtain the transfer function of C(s)/R(s) of the system whose signal flow graph is shown in Fig.

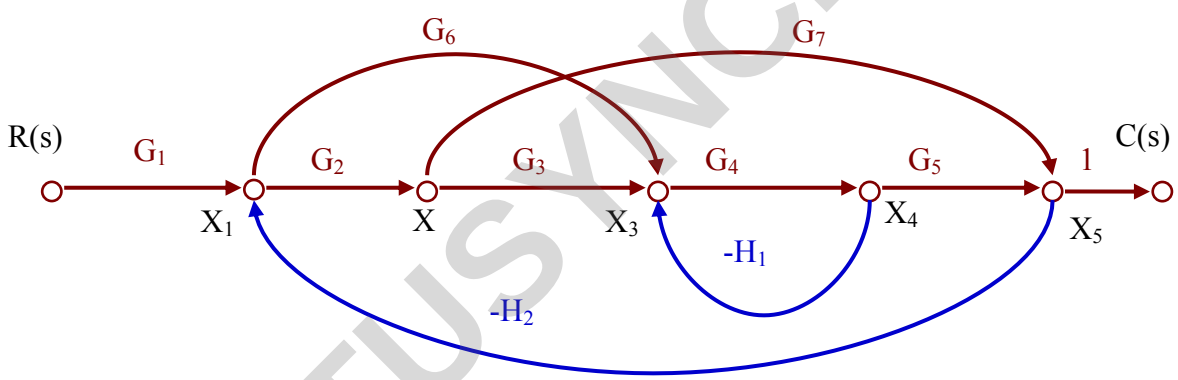

Q.9 For the system represented by the following equations find the transfer function X(s)/U(s) using signal flow graph technique.

$$X = X_1 + \beta_3 u$$

$$\dot{X}_1 = -a_1 X_1 + X_2 + \beta_2 u$$

$$X_2 = -a_2 \dot{X}_1 + \beta_1 u$$

VTUSYNC.IN